NECA 305-201x

Standard for Fire Alarm System Job Practices

ANSI Canvass Draft –

Foreword

National Electrical Installation Standards™ are designed to improve communication between specifiers, purchasers, and suppliers of electrical construction services. They define a minimum baseline of quality and workmanship for installing electrical products and systems. *NEIS*™ are intended to be referenced in contract documents for electrical construction projects. The following language is recommended:

Fire Alarm Systems shall be installed in accordance with NECA 305, *Standard for Fire Alarm System Job Practices* (ANSI).

Use of *NEIS* is voluntary, and NECA does not assume any obligation or liability to users of these standards. Existence of a standard shall not preclude any member or nonmember of NECA from specifying or using alternate electrical construction methods permitted by applicable codes and regulations.

Everything in this standard is intended to comply with the editions of the National Fire Alarm and Signaling Code® and the National Electrical Code® in effect at the time of publication. *NEIS*™ are not intended to duplicate the safety requirements of these codes or to establish regulatory requirements for electrical construction. It is the responsibility of users of this standard to comply with applicable state and local electrical codes when installing electrical products and systems.

This standard was developed by the National Electrical Contractors Association (NECA).

Suggestions for revisions and improvements to this standard are welcome at the following address.

NECA Codes and Standards
3 Bethesda Metro Center, Suite 1100
Bethesda, MD 20814
(301) 215-4521 Phone
(301) 215-4500 Fax
hbs@necanet.org

To purchase *National Electrical Installation Standards* call the NECA Order Desk at (301) 215-4504, (301) 215-4500 fax, or orderdesk@necanet.org.

Table of Contents

1.0 Scope

This standard describes practices for installing, testing, and maintaining fire alarm systems. These job practices represent a minimum level of quality for fire alarm system installations. This standard is intended to define what is meant by installing equipment in a "neat and workmanlike manner" as required by the National Electrical Code®, Article 760, 760.24.

All information in this publication is intended to comply with the following standards. Installers should always follow NFPA 72®, National Fire Alarm and Signaling Code®; NFPA 70®, National Electrical Code® (NEC®); and other applicable standards, state and local codes; and manufacturers' instructions when installing fire alarm equipment and systems.

Note: All references in this standard are to NFPA 72®-2016 and NFPA 70®-2017.

1.1 Fire Alarm System Overview

The NFPA definition of a fire alarm system is: "*A system or portion of a combination system that consists of components and circuits arranged to monitor and annunciate the status of fire alarm or supervisory signal-initiating devices and to initiate the appropriate response to those signals.*" In order to meet the intent of the definition, all fire alarm system installations must conform to NFPA 72®, National Fire Alarm and Signaling Code requirements. All system components must be listed for use in a fire alarm system and installed in accordance with applicable installation instructions. Additionally, the system must meet local codes and be approved by the authority having jurisdiction(s).

Simply put, a fire alarm system detects fire conditions, notifies building occupants and emergency response personnel, and provides control functions (elevators, fans, dampers, etc.). However, there is a major difference between fire alarm systems and most other electrical systems.

A fire alarm system monitors field wiring and key system components for operational readiness. In a typical electrical system, a broken wire goes unnoticed until a switch is turned on or a thermostat calls for heat or cooling. The fire alarm system monitors for broken wires, shorted wires, grounded wires, and failure of key components. Each of these faults generates a visible and audible trouble signal. The required fire alarm system functionality makes proper installation of the field wiring critical to the successful completion and operation of the system.

Fire alarm systems interconnect with other systems for the purpose of providing control signals during a fire emergency. It is sometimes difficult to determine where the fire alarm system stops and other systems start. If a fire alarm system controls and powers the "other system," the "other system" is part of the fire alarm system. Example: A fire alarm system can control and power a smoke control system making it part of the fire alarm system. Or, a fire alarm system can provide signals (e.g., relay dry contacts) to a separately listed smoke control system, which has its own power source: This "other system" is not part of the fire alarm system. The wiring requirements for the "other system" are covered by the NEC®, but not covered by Article 760. The following Section from the NEC provides guidance.

"760.1 Scope.

This article covers the installation of wiring and equipment of fire alarm systems including all circuits controlled and powered by the fire alarm system.
Informational Note No. 1: Fire alarm systems include fire detection and alarm notification, guard's tour, sprinkler waterflow, and sprinkler supervisory systems. Circuits controlled and powered by the fire alarm system include circuits for the control of building systems safety functions, elevator capture, elevator shutdown, door release, smoke doors and damper control, fire doors and damper control and fan shutdown, but only where these circuits are powered by and controlled by the fire alarm system. For further information on the installation and monitoring for integrity requirements for fire alarm systems, refer to the NFPA 72®-2016, National Fire Alarm and Signaling Code®.

Informational Note No. 2: Class 1, 2, and 3 circuits are defined in Article 725."

The following table shows Chapter assignments for the 2016 editions of NFPA 72®, National Fire Alarm and Signaling Code.

Chapter Name	**2016**
Administration	1
Referenced Publications	2
Definitions	3
Reserved	4
Reserved	5
Reserved	6
Documentation	7
Reserved	8
Reserved	9
Fundamentals of Fire Alarm Systems	10
Reserved	11
Circuits and Pathways	12
Reserved	13
Inspection, Testing, and Maintenance	14
Reserved	15
Reserved	16
Initiating Devices	17
Notification Appliances	18
Reserved	19
Reserved	20
Emergency Control Function Interfaces	21
Reserved	22
Protected Premises Fire Alarm Systems	23
Emergency Communications Systems (ECS)	24
Reserved	25
Supervising Station Fire Alarm Systems	26
Public Emergency Alarm Reporting Systems	27
Reserved	28
Single- and Multiple-Station Alarms and Household Fire Alarm Systems	29
Explanatory Material	Annex A
Engineering Guide for Automatic Fire Detector Spacing	Annex B
System Performance and Design Guide	Annex C
Speech Intelligibility	Annex D
Sample Ordinance Adopting NFPA 72	Annex E
Wiring Diagrams and Guide for Testing Fire Alarm Circuits	Annex F
Guidelines for Emergency Communication Strategies for Building and Campuses	Annex G
Informational References	Annex H
Index	Index

2.0 Definitions

Acknowledge. To confirm that a message or signal has been received, such as by the pressing of a button or the selection of a software command.

Addressable Device. A fire alarm system component with discrete identification that can have its status individually identified or that is used to individually control other functions.

Air Sampling-Type Detector. A detector that consists of a piping or tubing distribution network that runs from the detector to the area(s) to be protected. An aspiration fan in the detector housing draws air from the protected area back to the detector through air sampling ports, piping, or tubing. At the detector, the air is analyzed for fire products.

Alarm. An indication of the existence of a condition that requires immediate response.

Alarm Verification Feature. A feature of automatic fire detection and alarm systems to reduce unwanted alarms wherein smoke detectors report alarm conditions for a minimum period of time, or confirm alarm conditions within a given time period after being reset, in order to be accepted as a valid alarm initiation signal.

Annunciator. A unit containing one or more indicator lamps, alphanumeric displays, or other equivalent means in which each indication provides status information about a circuit, condition, or location.

Auxiliary Fire Alarm System. A protected premises fire alarm system or other emergency system at the protected premises and the system used to connect the protected premises system to a public emergency alarm reporting system for transmitting an alarm to the communications center.

Average Ambient Sound Level. The root mean square, A-weighted, sound pressure level measured over the period of time that any person is present, or a 24-hour period, whichever time period is the lesser.

Central Station Service Alarm System. A system or group of systems in which the operations of circuits and devices are transmitted automatically to, recorded in, maintained by, and supervised from a listed central station that has competent and experienced servers and operators who, upon receipt of a signal, take such action as required by this Code. Such service is to be controlled and operated by a person, firm, or corporation whose business is the furnishing, maintaining, or monitoring of supervised fire alarm systems.

Circuit Interface. A circuit component that interfaces initiating devices or control circuits, or both; notification appliances or circuits, or both; system control outputs; and other signaling line circuits to a signaling line circuit.

Class A Circuit. A circuit capable of transmitting an alarm signal during a single open or a non-simultaneous single ground fault.

Class B Circuit. A two-wire circuit that permits system operation up to the point of an open circuit.

Coded. An audible or visible signal that conveys several discrete bits or units of information.

Combination System. A fire alarm system in which components are used, in whole or in part, in common with a non-fire signaling system.

Control Unit. A system component that monitors inputs and controls outputs through various types of circuits.

Digital Alarm Communicator Transmitter (DACT). A system component at the protected premises to which initiating devices or groups of devices are connected. The DACT seizes the connected telephone line, dials a preselected number to connect to a Digital Alarm Communicator Receiver (DACR), and transmits signals indicating a status change of the initiating device.

Dwelling Unit. One or more rooms arranged for the use of one or more individuals living together, providing complete, independent living facilities, including permanent provisions for living, sleeping, eating, cooking, and sanitation.

Emergency Communications System. A system for the protection of life by indicating the existence of an emergency situation and communicating information necessary to facilitate an appropriate response and action.

Endpoint (Class N). The end of a pathway where a single addressable device or a control unit is connected.

Fire Alarm Control Unit. A component of the fire alarm system, provided with primary and secondary power sources, which receives signals from initiating devices or other fire alarm control units, and processes these signals to determine part or all of the required fire alarm system output function(s).

Fire Alarm/Evacuation Signal Tone Generator. A device that produces a fire alarm/evacuation tone upon command.

Fire Alarm System. A system or portion of a combination system that consists of components and circuits arranged to monitor and annunciate the status of fire alarm or supervisory signal-initiating devices and to initiate the appropriate response to those signals.

Fire Command Center. The principal attended or unattended location where the status of the detection, alarm communications, and control systems is displayed and from which the system(s) can be manually controlled.

Fire Extinguisher Electronic Monitoring Device. A device connected to a control unit that monitors the fire extinguisher in accordance with the requirements of NFPA 10.

Fixed-Temperature Detector. A device that responds when its operating element becomes heated to a predetermined level.

Gateway. A device that is used in the transmission of serial data (digital or analog) from the fire alarm control unit to other building system control units, equipment, or networks and/or from other building system control units to the fire alarm control unit.

Heat Detector. A fire detector that detects either abnormally high temperature or rate of temperature rise, or both.

Household Fire Alarm System. A system of devices that uses a fire alarm control unit to produce an alarm signal in the household for the purpose of notifying the occupants of the presence of a fire so that they will evacuate the premises.

Initiating Device. A system component that originates transmission of a change-of-state condition, such as in a smoke detector, manual fire alarm box, or supervisory switch.

IDC (Initiating Device Circuit). A circuit to which automatic or manual initiating devices are connected where the signal received does not identify the individual device operated.

Ionization Smoke Detection. The principle of using a small amount of radioactive material to ionize the air between two differentially charged electrodes to sense the presence of smoke particles. Smoke particles entering the ionization chamber decrease the conductance of the air by reducing ion mobility. The reduced conductance signal is processed and used to convey an alarm condition when it meets preset criteria.

Life Safety Network. A type of combination system that transmits fire safety control data through gateways to other building system control units.

Line-Type Detector. A device in which detection is continuous along a path. Typical examples are rate-of-rise pneumatic tubing detectors, projected beam smoke detectors, and heat-sensitive cable.

Maintenance. Work, including, but not limited to, repair, replacement, and service, performed to ensure that equipment operates properly.

Manual Fire Alarm Box. A manually operated device used to initiate an alarm signal.

Multiple Station Alarm. A single-station alarm capable of being interconnected to one or more additional alarms so that the actuation of one causes the appropriate alarm signal to operate in all interconnected alarms.

Multiple-Station Alarm Device. Two or more single-station alarm devices that can be interconnected so that actuation of one causes all integral or separate audible alarms to operate; or one single station alarm device having connections to other detectors or to a manual fire alarm box.

Municipal Fire Alarm System. A public fire alarm reporting system.

Non-power-Limited Fire Alarm Circuit (NPLFA). A fire alarm circuit powered by a source not greater than 600 volts with unlimited current capacity and with overcurrent protection provided at the point of connection to the power source. [See 2017 NEC, Sections 760.41 and 760.43.]

Nonrequired. A fire alarm system component or group of components that is installed at the option of the owner, and is not installed due to a building or fire code requirement.

Nonrestorable Initiating Device. A device in which the sensing element is designed to be destroyed in the process of operation.

Notification Appliance. A fire alarm system component such as a bell, horn, speaker, light, or text display that provides audible, tactile, or visible outputs, or any combination thereof.

Notification Appliance Circuit. A circuit or path directly connected to a notification appliance(s).

Nuisance Alarm. An unwanted activation of a signaling system or an alarm initiating device in response to a stimulus or condition that is not the result of a potentially hazardous condition.

Operating Mode, Private. Audible or visible signaling only to those persons directly concerned with the implementation and direction of emergency action initiation and procedure in the area protected by the fire alarm system.

Operating Mode, Public. Audible or visible signaling to occupants or inhabitants of the area protected by the fire alarm system.

Permanent Visual Record (Recording). An immediately readable, not easily alterable, print, slash, or punch record of all occurrences of status change.

Photoelectric Light Obscuration Smoke Detection. The principle of using a light source and a photosensitive sensor onto which the principal portion of the source emissions is focused. When smoke particles enter the light path, some of the light is scattered and some is absorbed, thereby reducing the light reaching the receiving sensor. The light reduction signal is processed and used to convey an alarm condition when it meets preset criteria.

Photoelectric Light-Scattering Smoke Detection. The principle of using a light source and a photosensitive sensor arranged so that the rays from the light source do not normally fall onto the photosensitive sensor. When smoke particles enter the light path, some of the light is scattered by reflection and refraction onto the sensor. The light signal is processed and used to convey an alarm condition when it meets preset criteria.

Positive Alarm Sequence. An automatic sequence that results in an alarm signal, even when manually delayed for investigation, unless the system is reset.

Power-Limited Fire Alarm Circuit (PLFA). A fire alarm circuit powered by a source that is listed and marked as follows: a listed PLFA or Class 3 transformer; a listed PLFA or Class 3 power supply; or Listed equipment marked to identify the PLFA power source. The power output is 100 VA, maximum, over a range of voltages. [See 2017 NEC, Section 760.121.]

Primary Battery (Dry Cell). A nonrechargeable battery requiring periodic replacement.

Prime Contractor. The one company contractually responsible for providing central station services to a subscriber as required by NFPA 72®. The prime contractor can be either a listed central station or a listed fire alarm service–local company.

Projected Beam-Type Detector. A type of photoelectric light obscuration smoke detector wherein the beam spans the protected area.

Proprietary Supervising Station. An installation of fire alarm systems that serves contiguous and noncontiguous properties, under one ownership, from a proprietary supervising station located at the protected premises, or at one of multiple non-contiguous protected premises, at which trained, competent personnel are in constant attendance. This includes the protected premises fire alarm system(s): proprietary supervising station; power supplies; signal-initiating devices; initiating device circuits; signal notification appliances; equipment for the automatic, permanent visual recording of signals; and equipment for initiating the operation of emergency building control services.

Protected Premises (Local) Fire Alarm System. A fire alarm system located at the protected premises.

Public Emergency Alarm Reporting System. A system of alarm-initiating devices, transmitting and receiving equipment, and communication infrastructure (other than a public telephone network) used to communicate with communications center to provide any combination of manual or auxiliary alarm service.

Radiant Energy-Sensing Fire Detector. A device that detects radiant energy, such as ultraviolet, visible, or infrared, that is emitted as a product of combustion reaction and obeys the laws of optics.

Rate Compensation Detector. A device that responds when the temperature of the air surrounding the device reaches a predetermined level, regardless of the rate of temperature rise.

Rate-of-Rise Detector. A device that responds when the temperature rises at a rate exceeding a predetermined value.

Record Drawings. Drawings (as-built) that document the location of all devices, appliances, wiring sequences, wiring methods, and connections of the components of the fire alarm system as installed.

Record of Completion. A document that acknowledges the features of installation, operation (performance), service, and equipment with representation by the property owner, system installer, system supplier, service organization, and the authority having jurisdiction.

Relocation. The movement of occupants from a fire zone to a safe area within the same building.

Remote Supervising Station Fire Alarm System. A protected premises fire alarm system (exclusive of any connected to a public fire reporting system) in which alarm, supervisory, or trouble signals are transmitted automatically to, recorded in, and supervised from a remote supervising station that has competent, and experienced servers and operators who, upon receipt of a signal, take such action as required by this Code.

Reset. A control function that attempts to return a system or device to its normal, non-alarm state.

Restorable Initiating Device. A device in which the sensing element is not ordinarily destroyed in the process of operation, whose restoration can be manual or automatic.

Shall. Indicates a mandatory requirement.

Shop Drawings. Documents that provide information pertaining to the system necessary for installation of a fire alarm and/or signaling system.

Should. Indicates a recommendation or that which is advised but not required.

Signaling Line Circuit. A circuit path between any combination of addressable appliances or devices, circuit interfaces, control units, or transmitters over which multiple system input signals or output signals or both are carried.

Signaling Line Circuit Interface. A system component that connects a signaling line circuit to any combination of initiating devices, initiating device circuits, notification appliances, notification appliance circuits, system control outputs, and other signaling line circuits.

Single Dwelling Unit. A building consisting solely of one dwelling unit. (See Dwelling Unit.)

Single Station Alarm. A detector comprising an assembly that incorporates a sensor, control components, and an alarm notification appliance in one unit operated from a power source either located in the unit or obtained at the point of installation.

Site-Specific Software. Program that is separate from, but controlled by, the executive software that allows inputs, outputs, and system configuration to be selectively defined to meet the needs of a specific installation. Typically it defines the type and quantity of hardware, customized labels, and the specific operating features of a system.

Sloping Ceiling. A ceiling that has a slope of more than 1 in 8.

Smoke Alarm. A single- or multiple-station alarm responsive to smoke.

Smoke Detector. A device that detects visible or invisible particles of combustion.

Smooth Ceiling. A ceiling surface uninterrupted by continuous projections, such as solid joists, beams, or ducts, extending more than 4 in. (100 mm) below the ceiling surface.

Spacing. A horizontally measured dimension related to the allowable coverage of devices.

Spot-Type Detector. A device in which the detecting element is concentrated at a particular location. Typical examples are bimetallic detectors, fusible alloy detectors, certain pneumatic rate-of-rise detectors, certain smoke detectors, and thermoelectric detectors.

Supervisory Signal. A signal indicating the need for action in connection with the supervision of guard tours, the fire suppression systems or equipment, or the maintenance features of related systems.

Supervisory Signal Initiating Device. An initiating device such as a valve supervisory switch, water level indicator, or low air pressure switch on a dry-pipe sprinkler system in which the change of state signals an off-normal condition and its restoration to normal of a fire protection or life safety system; or a need for action in connection with guard tours, fire suppression systems or equipment, or maintenance features of related systems.

Supplementary. As used in NFPA 72®, *supplementary* refers to equipment or operations not required by NFPA 72 and designated as such by the authority having jurisdiction.

Tactile Notification Appliance. A notification appliance that alerts by the sense of touch or vibration.

Textual Visible Notification Appliance. A notification appliance that conveys a stream of audible information than conveys a stream of visible information that displays an alphanumeric or pictorial message.

Transponder. A multiplex alarm transmission system functional assembly located at the protected premises.

Trouble Signal. A signal that results from the detection of a trouble condition.

Visible Notification Appliance. A notification appliance that alerts by the sense of sight.

Zone. A defined area within the protected premises. A zone can define an area from which a signal can be received, an area to which a signal can be sent, or an area in which a form of control can be executed.

3.0 Prepare for Installation

3.1 Receive, Inventory and Store Equipment

a) Check received equipment against the packing list and the job bill of material
b) Check equipment for shipping damage
c) Store equipment in a dry, safe place

3.2 Documents

Have access to the following:

a) Approved shop drawings

Note: The word "Approved is defined in Section 3 of NFPA 72 as acceptable to the authority having jurisdiction."

b) Manufacturer's installation instructions
c) Local code, as required
d) Record of Completion (NFPA 72®-2016, Figure 7.8.2(a) through 7.8.2(f))

Note: This document is available from afaa.org; Automatic Fire Alarm Association, 81 Mill Street, Gahanna, OH 43230.

3.3 Tools

Common hand tools and a volt/ohm meter are required to install a fire alarm system. Refer to manufacturer's literature to determine if special tools are required: e.g., keys for cabinets and manual fire alarm boxes, drivers for tamper-proof screws used on field devices and outdoor junction boxes, and a wrist strap (to prevent electrostatic damage to electronic components).

3.4 Job Installation

NFPA 72®, 10.5.2.1 requires, "Fire alarm systems and emergency communications systems installation personnel shall be qualified or shall be supervised by persons who are qualified in the installation, inspection, and testing of fire alarm systems."

NFPA 72®, 10.5.2.2 requires, "State or local licensure regulations shall be followed to determine qualified personnel.

NFPA 72®, 10.5.2.3 requires, Personnel shall provide documentation of their qualification by one or more of the following:

(1) Registration, licensing, or certification by a state or local authority
(2) Certification by an organization acceptable to the authority having jurisdiction
(3) Manufacturer's certification for the specific type and brand of system provided

3.5 Plan the Installation

This section lists the major steps for installing a fire alarm system. Installation procedures provide detailed instructions.

a) Rough-in (mount) the control unit enclosure (back box) [See 4.0]
b) Install system wiring and field device back boxes and raceway if applicable, as required [See 5.0]
c) Install field devices [See 6.0]
d) Check system wiring [See 7.0]
e) (Re-)Install assemblies in control unit back box, as required [See 8.0]
f) Terminate system wiring [See 8.0]
g) Program system functions [See 8.0]

h) Perform a complete system test [See 8.0]
i) Complete job documentation

3.6 Job Pacs

During the installation planning process, especially on large jobs, consider using "Job Pacs." Job Pacs may provide for efficient management of the installation equipment. Job Pacs provide an additional control of job site equipment.

Job Pacs (one or more sequentially numbered boxes) contain the equipment required for a floor, wing, or room. Enter the Job Pac number on the shop drawings for job site coordination. Example: Job Pacs #12W1 and #12W2 may contain smoke detectors, fire alarm boxes, and strobes and speakers necessary to complete the installation of field devices on the 12th floor, west wing.

4.0 Install Fire Alarm Control Panel(s)

4.1 Code References: NFPA 72® Chapter 10 Fundamentals

4.2 Installation Guidelines

A fire alarm system consists of one or more control units. A master control unit connects to other control units or interface panels.

Fire alarm control units ship in various combinations:

a) Enclosures may be shipped separately (no electronic assemblies) for job rough-in.
b) Enclosures, control unit doors, and the electronic assemblies may be individually packaged and shipped together in an over-pack.
c) Enclosures may be shipped complete, with the electronic assemblies installed in the enclosure.

4.3 Enclosure Installation

The general procedures listed below shall be used when installing an enclosure, unless manufacturer's instructions are different. If the enclosure is shipped separately, some steps can be omitted. Manufacturers provide specific installation instructions with the fire alarm control unit or empty enclosure.

a) Carefully open the shipping container.
b) Inventory the contents of the shipping container. (See packing list.)
c) Remove the fire alarm control unit from the shipping container.
d) Remove door (cover).
e) Remove any internal doors or dead-front covers.
f) Tag one end of each interconnection cable, if required.
g) Remove one end of all interconnection cables from the electronic assemblies, if required.
h) Remove electronic assemblies and power supplies using directions supplied by the manufacturer. *Note: The use of a grounded wrist strap is recommended to prevent electrostatic damage to electronic components when removing or replacing electronic assemblies.*
i) Carefully wrap and place the covers, internal doors and dead-fronts, and electronic assemblies in the shipping container.
j) Store the shipping container in a safe, secure, clean, and dry location until system field wiring is completed, and job conditions permit mounting the electronics and door. The control unit will be reassembled after installation of the system wiring and field devices.
k) Fire alarm control unit enclosures are installed surface, semi-flush, or flush mounted, according to manufacturers' instructions and Contract Documents.
l) Use the enclosure as a template for marking the location of the mounting holes.
m) Mount enclosure so accidental operation or failure is not caused by vibration or jarring.
n) The power source for the control unit should be between 85% and 110% of nameplate rating (102 VAC to 132 VAC for 120 VAC rated control unit).
o) The temperature should be maintained between 0°C (32°F) and 49°C (120°F).
p) The relative humidity should be less than 93% at 32°C (90°F).

Note: *Panels may be listed for operation outside of the voltage, temperature and humidity limitations listed above. Check manufacturer's installation instructions shipped with the equipment.*

q) Locate the fire command center, if applicable, within a minimum 1-hour fire-rated area, or other space approved by the Authority Having Jurisdiction.

r) Provide at least 900 mm (3 ft) of clearance in front of the fire command center.
s) The fire alarm control unit shall be provided at a building entrance or other location approved by the authority having jurisdiction.
t) Install battery enclosure adjacent to fire alarm enclosure, if provided. Limit conduit entry to bottom corners of enclosure, if possible.

4.4 Cautions

a) Provide sufficient space from walls and other equipment so the door can be opened 90º, minimum, or as necessary to install door.
b) Some enclosures may be "butted" together, while others must be slightly spaced and close-nippled, to assure covers can be opened.
c) Observe space reserved for installation of batteries, usually in the bottom of the fire alarm control unit enclosure. Refer to manufacturers' instructions.

5.0 Install System Wiring

5.1 Code References: NFPA 70®, Article 760
NFPA 72®, Chapter 12
NFPA 70®, Article 725

5.2 Circuits With Special Requirements

Fire alarm circuits and pathways can be a Class A, Class B, Class C, Class D, Class E, Class N, or Class X. It is important to understand these terms before installing fire alarm circuits. For example, Class N circuits will be routed through a data center. With the emergence and growth of Power over Ethernet, the typical 60°C cable insulation may be insufficient. Review the requirements of the 2017 NEC®, Sections 725.121, 725.144, and Table 725.144.

The power source connected to the circuits determines whether the circuits are power-limited or non-power-limited. A non-power-limited circuit has a maximum of 600 volts with no current limitation. The typical non-power-limited circuit is 24 VDC, and up to 10 amps; or 70 VAC and a few hundred watts for speakers. A power-limited circuit is limited to 100 VA, with voltage limited to 150 volts at the 100 VA power level. The typical power-limited circuit is 24 VDC, 4 amps.

A fire alarm control connects to the following types of circuits: Initiating Device Circuit (IDC), Notification Appliance Circuit (NAC), and Signaling Line Circuit (SLC). See Definitions. Certain circuits must be installed in a 2-hour fire-rated cable, or a 2-hour rated fire-enclosure or shaft.

The methods and materials used must meet NEC® Article 760 requirements. Additionally, NFPA 72® may have performance requirements that amend the NEC® requirements.

Figure 1 shows a Class A IDC. The end-of-line device (resistor) is factory installed, internally.

Figure 2 shows a Class B NAC. The end-of-line device connects after the last device on the circuit.

The following NFPA 72 sections, 6.4.2.1.1 and 6.4.2.2.2, provide installation requirements that are in addition to NEC requirements:

5.2.1 Class A Circuits

Install Class A circuit conductors so the outgoing and return conductors, exiting from and returning to the control unit are routed separately. The outgoing and return (redundant) circuit conductors must not be run in the same cable assembly, enclosure, or raceway. Exceptions follow:
The outgoing and return (redundant) circuit conductors shall be permitted to be run in the same cable assembly, enclosure, or raceway under any of the following conditions:
(1) For a distance not to exceed 3 m (10 ft) where the outgoing and return conductors enter or exit the initiating device, notification appliance, or control unit enclosures
(2) Single conduit/raceway drops to individual devices or appliances
(3) Single conduit/raceway drops to multiple devices or appliances installed within a single room not exceeding 92.9 m^2 (1000 ft^2) in area

5.2.2 Notification Appliance Circuits

Where building occupant relocation or partial evacuation during a fire emergency is required, the following applies:

Install notification appliance circuits and any other circuits necessary for the operation of the notification appliance circuits protected from the point at which they exit the control unit until the point that they enter the notification zone that they serve using one or more of the following methods:

(a) A 2-hour fire rated circuit integrity (CI) cable
(b) A 2-hour fire rated cable system (electrical circuit protective system)
(c) A 2-hour fire rated enclosure
(d) Performance alternatives approved by the authority having jurisdiction
(e) Buildings fully protected by an automatic sprinkler system installed in accordance with NFPA 13, Standard for the Installation of Sprinkler Systems, and with the interconnecting wiring or cables used for the operation of notification appliances installed in metal raceways and in accordance with Article 760 of NFPA 70

5.2.3 Fire Alarm System Equipment remote from Fire Alarm Control Unit

Where emergency voice/alarm control equipment is dependent on remotely located control equipment, install the interconnecting circuits using any of the following methods:.

(a) A 2-hour fire rated circuit integrity (CI) cable
(b) A 2-hour fire rated cable system (electrical circuit protective system)
(c) A 2-hour fire rated enclosure
(d) Performance alternatives approved by the authority having jurisdiction
(e) Buildings fully protected by an automatic sprinkler system installed in accordance with NFPA 13, Standard for the Installation of Sprinkler Systems, and with the interconnecting wiring or cables used for the operation of notification appliances installed in metal raceways and in accordance with Article 760 of NFPA 70

5.3 Installation Guidelines

Article 760 of the NEC contains the requirements for installation of fire alarm system circuits: Non-power-limited, and power-limited. These two types of circuits must be installed separate from each other. That is, do not install non-power-limited and power-limited circuits in the same cable or raceway. Power circuit conductors are permitted to be installed in the same raceway with non-power-limited circuits, where the power circuit is functionally associated with the system—typically power for the control unit. Non-power-limited, power-limited, and control unit power circuits are permitted in a common enclosure.

5.3.1 General Requirements (NEC, Article 760, Part I)

a) Install all wiring to meet the requirements of Article 760 of the NEC, unless the NEC conflicts with local code. Local code prevails.
b) Identify fire alarm circuits at terminal and junction locations. An excellent practice is to install red covers labeled “Fire Alarm Circuit.”
c) Support cables by the building structure.
d) Install circuits extending beyond one building according to the requirements of NEC Section 760.32, which refers to Article 225 and Article 800, Parts B, C, and D.

5.3.2 Non-power-limited circuits (NEC, Article 760, Part II)

a) Non-power-limited circuits shall be installed using any of the following materials and methods:

1) Conductors from NEC, Table 310.13(a) installed in raceway, as permitted by NEC, Chapter 3.
2) Conductors from NEC, Table 402.3 listed in Section 760.49(B) installed in raceway.
3) Multiconductor cables described in NEC Section 760.53 installed in raceway or exposed.

b) Solid or stranded copper conductors must be used.

c) Install overcurrent protection for each conductor at the point where the conductor receives its supply.

d) Install multiconductor non-power-limited fire alarm cables as follows:
1) In raceway or exposed on surface of ceiling and sidewalls or in concealed spaces.
2) Cable must be protected to a height of 2.1m (7 ft) by building construction, metal raceway, or rigid nonmetallic conduit.
3) Cables installed in hoistways must be in rigid metal conduit, rigid nonmetallic conduit, intermediate metal conduit or electrical metallic tubing.
4) Install Type NPLFP (plenum cable) in other space used for environmental air. This includes ceiling and raised floor plenum spaces. Do not install non-power-limited cable in air ducts.
5) Install Type NPLFR (riser cable) in a vertical run in a shaft or from floor to floor.
6) Install Type NPLF for general applications.

5.3.3 Power-limited circuits (Article 760, Part III)

a) Power-limited circuits shall be installed using any of the following materials and methods:
1) Conductors from NEC, Table 310.13(a) installed in raceway, as permitted by NEC, Chapter 3.
2) Conductors from NEC, Table 402.3 listed in Section 760.49(B) installed in raceway.
3) Multiconductor cables described in NEC Section 760.53 installed in raceway or exposed.

b) Solid or stranded copper conductors must be used. [Note: Coaxial cable is permitted to have a 30% conductivity copper-covered steel center conductor.] Conductors smaller than size 26 AWG are not permitted: 26 AWG conductors require special termination methods.

c) Install multiconductor power-limited fire alarm cables as follows:
1) In raceway or exposed on surface of ceiling and sidewalls or in concealed spaces.
2) Cable must be protected to a height of 2.1 m (7 ft) by building construction, metal raceway, or rigid nonmetallic conduit.
3) Cables installed in hoistways must be in rigid metal conduit, rigid nonmetallic conduit, intermediate metal conduit or electrical metallic tubing.
4) Install Type FPLP (plenum cable) in air ducts and other space used for environmental air.
5) Install Type FPLR (riser cable) in a vertical run in a shaft or from floor to floor.
6) Install Type FPL for general applications.

Note: *See NEC, Table 760.154(D) for permitted cable substitutions to Types FPLP, FPLR, and FPL.*

7) Install Optical Fiber Cable according to the requirements in NEC, Article 770

5.4 Cautions

a) **Insulation is not a means of separation of circuits.** Power-limited circuit conductors and cables must not be installed in a raceway with electric light, power, Class 1, and non-power-limited circuit conductors and cables. Conductors of electric light, power, Class 1 and non-power-limited circuits are protected by overcurrent protection. Conductors of a power-limited circuit are connected to a power-limited power source, 100 VA, maximum. A fault between these two types of circuits could cause a fire or shock hazard.
Note: Some code jurisdictions have a requirement that fire alarm cables must be red in color.

b) Manufacturer's installation instructions provide mounting and termination methods.

6.0 Install Field Devices

Review the following before installing field devices:

a) Do not "T-tap" detectors. The exception is addressable detectors on a Class B circuit, if permitted by the manufacturer. Refer to manufacturer's Installation Instructions.
b) Figure 3 shows correct and incorrect termination methods.
c) Figure 4 shows correct and incorrect termination methods on various types of field devices.
d) Figure 5 shows connections to a 4-wire smoke detector circuit (IDC). Note the relay at the end of the power circuit. An end-of-line relay must be connected at the end of each power circuit.

6.1 Manual Fire Alarm Station (Box)

6.1.1 Code References: NFPA 72 Section 17.14

6.1.2 Installation Guidelines

a) Mount the bottom of the electrical box 1.1 m (3½ ft) [42 inches] above the floor. NFPA 72 requires that the operable part of each manual fire alarm station shall be not less than 1.1 m (3 ½ ft) and not more than 1.4 m (4½ ft) above the floor level.
b) Mount manual fire alarm stations within 1.5 m (5 ft) of the exit doorway opening.
c) The horizontal travel distance between manual fire alarm stations must be less than 61 m (200 ft).

6.1.3 Cautions

a) Do not mount where the manual fire alarm station will be hidden from view by obstructions.
b) Door widths (multiple doors) over 12.2 m (40 ft) wide require manual fire alarm stations on each side of the set of doors.

6.2 Area Smoke Detector (Spot-type)

6.2.1 Code References: NFPA 72, Section 17.7.3.2

6.2.2 Installation Guidelines

a) Mount detectors on the ceiling not less than 100mm (4 in.) from a side wall to the near edge or, if on a side wall, between 100 mm (4 in.) and 300 mm (12 in.) down from the ceiling to the top of the detector. See Figure 6.
b) Mount detectors at least 900 mm (3 ft) from air diffusers. See Figure 7.
c) On smooth ceilings, spacing of up to 9.0 m (30 ft) is permitted, based on spacing rating. The distance from a detector to the corner of a room must be 0.7 times the spacing rating, or less. There are additional sections requiring reduced spacing for ceilings over 3.0 m (10 ft), air changes greater than six per hour, beams, joists, and partitions. Determination of correct spacing is part of system design. Devices shall be installed as indicated on the approved shop drawings or as directed by AHJ in the field during the final approval process.

Note: Shop drawings may not capture all actual field conditions that relate for detector installation. Adjustments in location may be necessary for functionality and to attain AHJ approvals during field inspection.

d) Mount detectors within .900 mm (3 ft) of the highest point of a sloped or peaked ceiling. See Figure 8.
e) Mechanical guards must be listed for use with the detectors.
f) Detectors must be supported independently of the attached circuit conductors.
g) Conventional 2-wire and addressable smoke detectors must be listed for compatibility with the control unit.

Note: *Conventional 4-wire (separate power) smoke detectors do not require compatibility listing.*

h) Mount detectors on electrical boxes, unless equipped with listed fittings. Manufacturer's installation instructions shipped with the detector will show permitted mounting methods.
i) Install end-of-line devices electrically beyond the last detector. If convenient, connect the end-of line device to the last detector on the circuit. Record the location of and value of the end of line device on the drawings if not shown.
j) Observe polarity, if required.

6.2.3 Cautions

a) Protect detectors from job site dust and airborne contamination. Do not install detectors until the jobsite is ready for occupancy. Leave the shipping cover in place until system acceptance testing.
b) Do not recess detectors into the mounting surface.

6.3 Beam Smoke Detector

6.3.1 Code References: NFPA 72, Section 17.7.3.7

6.3.2 Installation Guidelines

a) Mount beam detector transmitter and receiver on stable surfaces to prevent nuisance or erratic operation due to movement. While mirrors are permitted, some manufacturers recommend mirrors not be used. Do not pendant-mount the transmitter or receiver (i.e., hang from the ceiling on a length of conduit or mount on a pole).
b) Select mounting positions where the beam path will be free of objects, such a lift trucks, which may block the beam path. See Figure 9. This figure shows the detector may be mounted away from a wall up to half the spacing rating.
c) Mount on walls and ceilings not subject to building movement or vibration.

6.3.3 Cautions

a) Do not mount the transmitter and receiver where the beam may be blocked by future partitions or walls.
b) Avoid mounting in areas where there may be smoke from kitchens and garages.
c) Do not mount where hot or cold air blow across the beam path. Heaters blowing across the beam path can distort the beam, causing the signal at the receiver to vary.
d) Do not mount where the receiver is exposed to sunlight and light from extremely bright sources such as high-pressure sodium, mercury vapor, and metal halide lights.

6.4 Duct Smoke Detector

Review the following before installing duct smoke detectors:

a) The two types of duct smoke detectors are: A detector using sampling tubes inserted in the air stream, and a spot-type detector listed for air duct application. A detector with sampling tubes mounts on supply or return air ducts. See Figure 10. Spot-type detectors are typically mounted

above a dropped ceiling directly in front of the return air duct, and are also listed for mounting in an air duct. See Figures 11 and 12.

b) **Duct smoke detectors are not a substitute for area smoke detectors. The primary purpose of a duct smoke detector is to shut down the fan when smoke is detected in the air duct.**

6.4.1 Code References: NFPA 72, Section 17.7.5
NFPA 90A-2015, Chapter 6

6.4.2 Installation Guidelines

a) Select a mounting location 6 to 10 duct widths downstream from or prior to an air duct restriction or bend. See Cautions.
b) Select a mounting location for the supply air duct detector or detector sampling tubes downstream of the fan and filters and ahead of any branch connections in the supply air duct.
c) Remove cover and electronic assemblies, if required, from detector housing.
d) For the sampling tube detector, use the detector housing, or provided template, to mark the holes for mounting the sampling tubes and housing.
e) Install the gasket material, if provided or required around the drilled holes.
f) Mount the detector housing.
g) Insert the sampling tubes with the holes of the inlet tube facing the airstream. For tubes longer than 3 feet, support internally or pass through the duct. If the tube protrudes through the other side of the duct, seal the exit hole in the duct and seal the end of the tube.
h) If the duct smoke detector is an area type, mounted in the duct, provide an access door.
i) Select a mounting location for the return air duct detector or detector sampling tubes at each story prior to the connection to a common return and prior to any recirculation or fresh air inlet connection in the air return system. This is usually above a dropped-ceiling. See Figure 12. Install remote indicator station if provided with the duct smoke detector.
j) Terminate wiring per shop drawings and manufacturer's literature.
k) Reassemble cover and electronic assemblies, as required.

6.4.3 Cautions

a) Mechanical contractors often install duct smoke detectors, which must be connected to the fire alarm system, if one exists in the building. Coordination between building trades will assure successful job completion.
b) It is often impossible to install duct detectors to meet the 6 to 10 duct widths downstream from or prior to a duct restriction or bend. In those situations, install the duct smoke detector as far as possible from bends and restrictions. The tests run with the inclined plane manometer or magnehelic over the possible range of air velocities will determine if the location is correct. See manufacturer's instructions.

6.5 Heat Detector (Spot-type)

6.5.1 Code References: NFPA 72, Section 17.6

6.5.2 Installation Guidelines

a) Mount spot-type heat-sensing detectors on the ceiling not less than 100 mm (4 in.) from a side wall to the near edge or, if on a side wall, between 100 mm (4 in.) and 300 mm (12 in.) down from the ceiling to the top of the detector.

b) Mount detectors so that the distance between detectors shall not exceed their listed spacing. The distance from a detector to the corner of a room must be 0.7 times the spacing rating, or less. There are additional code sections requiring reduced spacing for ceilings over 3.0 m (10 ft), beams, joists, and partitions. Determination of correct spacing is part of system design.
c) Mechanical guards must be listed for use with the detector.
d) Detectors must be supported independently of the attached circuit conductors.
e) Mount detectors on electrical boxes, unless equipped with listed fittings. Manufacturer's installation instructions shipped with the detector will show permitted mounting methods.
f) Install end-of-line devices electrically beyond the last detector. If convenient, connect the end-of line device to the last detector on the circuit. See 6.2.2.i

6.5.3 Cautions

a) Do not "T-tap" detectors. Installation of 3 or more conductors in a single wire nut or under a terminal screw is a "T-tap." The exception is addressable detectors on a Class B circuit where permitted by the manufacturer.
b) Protect detector from job site dust and airborne contamination. Do not install detector until the jobsite is ready for occupancy. Where provided, leave shipping cover in place until system acceptance testing.
c) Do not recess detectors into the mounting surface.

6.6 Waterflow Switch

Sprinkler systems companies normally install waterflow switches. This section addresses the types of devices connected to the fire alarm system, not how to install them. There are a two basic types of waterflow devices, which when activated provide an "alarm" signal at the fire alarm control unit. The types of waterflow switches are:

a) Paddle-type (paddle installed in the sprinkler pipe)
b) Pressure

6.6.1 Code References: NFPA 72, Section 17.12

6.6.2 Installation Guidelines

Terminate fire alarm conductors per shop drawings and manufacturer's literature.

6.6.3 Cautions

Coordinate with other trades, as required, when connecting to these devices.

6.7 Supervisory Switches

Sprinkler systems companies normally install suppression system supervisory devices. This section addresses the types of devices connected to the fire alarm system, not how to install them. There are a number of different types of supervisory devices, which when activated provide an "off-normal" signal at the fire alarm control unit. Supervisory devices may be installed to monitor the following:

a) Control valve
b) Pressure (air, water, steam)
c) Water level
d) Temperature (water tank, room)

6.7.1 Code References: NFPA 72, Section 17.16

6.7.2 Installation Guidelines

a) Terminate fire alarm conductors per shop drawings and manufacturer's literature.

6.7.3 Cautions

b) Coordinate with other trades, as required, when connecting to these devices.

6.8 Audible Notification Appliances (bells, horns, speakers, chimes)

6.8.1 Code References: NFPA 72, Section 18.4 and 18.5

6.8.2 Installation Guidelines

a) Install notification appliances on the ceiling or wall. Where wall-mounted, appliances shall have their tops above the floor at heights of not less than 2.3 m (90 in.), if possible, and the appliances must be mounted at least 150 mm (6 in.) below the ceiling.
b) Mechanical guards must be listed for use with the appliances.
c) Appliances must be supported independently of the attached circuit conductors.
d) Mount appliances on electrical boxes, unless equipped with listed fittings. Manufacturer's installation instructions shipped with the appliances detector will show permitted mounting methods.

6.8.3 Cautions

a) Appliances used in special environments, such as, outdoors, high or low temperatures, high humidity, dusty conditions, and hazardous locations must be listed for the application.

6.9 Visible Notification Appliances (Strobes)

6.9.1 Code References: NFPA 72. Section 18.5 and 18.6

6.9.2 Installation Guidelines

a) Install notification appliances on the ceiling or wall. Where wall-mounted, the lens of the appliance shall be not less than 2.0 m (80 in.) and not greater than 2.4 m (96 in.) above the floor, unless the mounting height is specified on engineered drawings. Visible notification appliances listed for ceiling mounting must be mounted or suspended at or below 9.14 m (30 ft).
b) Appliances shall be located not more than 4.5 m (15 ft) from the end of a corridor.
c) Appliances shall be located at a separation of not greater than 30.0 m (100 ft) in a corridor.
d) Appliances shall be supported independently of the attached circuit conductors.
e) Mount appliances on electrical boxes, unless equipped with listed fittings. Manufacturer's installation instructions shipped with the appliance will show permitted mounting methods.

6.9.3 Cautions

a) Compare shop drawings to the actual space to assure strobes are not blocked from view.
b) Appliances used in special environments, such as, outdoors, high or low temperatures, high humidity, dusty conditions, and hazardous locations must be listed for the application.
c) Combination audible/visible appliances must follow the guidelines for visible appliances.

6.10 DACT (Digital Alarm Communicator Transmitter)

The DACT is the most widely used type of off-premises signaling device. Where another type of device is used, follow manufacturer's instructions. The DACT sends signals to a DACR (Digital Alarm Communicator Receiver) at a remote location. The off-site monitoring organization typically

makes the connections to the DACR in a Central Station or Remote Supervising Station. For most systems, there are 2 phone lines connected to a DACT. The following list shows all the options for signal transmission:

a) Two telephone lines (numbers)
b) One telephone line (number) and one cellular telephone connection
c) One telephone line (number) and a one-way radio system
d) One telephone line (number) equipped with a derived local channel
e) One telephone line (number) and a one-way private radio alarm system
f) One telephone line (number) and a private microwave radio system
g) One telephone line (number) and a two-way RF multiplex system
h) A single integrated services digital network (ISDN) telephone line using a terminal adapter specifically listed for supervising station fire alarm service, where the path between the transmitter and the switched telephone network serving the central office is monitored for integrity so that the occurrence of an adverse condition in the path shall be annunciated at the supervising station within 200 seconds.

6.10.1 Code References: NFPA 72 Section 26.6

6.10.2 Installation Guidelines

a) Connect the DACT to the public switched telephone network upstream of any private telephone system at the protected premises. Connect the DACT to the building telephone system.
b) If the second channel is not a phone line, connect to the other equipment per manufacturer's instructions and shop drawings. The second channel may be a cell phone, RF transmitter, or other method listed.

6.10.3 Cautions

a) The DACT must be connected to a loop start telephone circuit, and not to a ground start telephone circuit.
b) The DACT must connect to the phone line ahead of all telephone devices, systems and equipment.
c) The DACT must disconnect any phone that is off-hook and seize control of the phone lines.

7.0 Check System Wiring

7.1 Wiring Test Guidelines

a) Make sure all conductors or cables are identified (e.g., tagged) with permanent marking.
b) A properly installed wiring system will have:
   1) No stray voltages
   2) No grounds
   3) No open circuits
   4) No short circuits
   5) Proper circuit resistance
c) Perform the following tests before terminating the conductors at the FACP.
d) Check wiring using the following sequence using a volt-ohm meter. The general procedure is to locate a wiring problem by "halving' the field circuit, until it is found.

7.2 Voltage

a) Set the meter to 300 VAC, or higher. Connect the meter leads across each pair of conductors. The voltage should read zero.
b) Set the meter to 30 VDC or higher. Connect meter leads across each pair of conductors. Reverse the leads and measure for voltage again, unless a center-zero meter or polarity-sensing meter is used. The voltage should read zero.
c) General troubleshooting procedure: Use extreme caution, as the voltage source is probably unknown. Go to a point electrically half way to the end of the circuit (e.g., device #8 out of 16). Disconnect both the incoming and outgoing leads from the device. Measure for voltage on both sets of conductors. Leave this device disconnected. Continue to "halve" the circuit with the voltage until the stray voltage source is located.

7.3 Grounds

a) Set the meter to the x10,000 ohms scale. Connect one of the meter leads to ground. Touch every conductor with the other meter lead. The resistance should read infinity—an open circuit.
b) General troubleshooting procedures: The resistance measured on one conductor will be near zero, while the other conductor will probably be about equal to the resistance of the end-of-line device. Go to a point "electrically" half way to the end of the circuit, as shown on shop drawings. Disconnect both the incoming and outgoing leads from the device. Determine which lead is grounded. Leave the device disconnected and insulate the four conductors and individually (wire nut or tape). Continue to "halve" the circuit with the ground fault until the circuit fault is located.

7.4 Open Circuits

a) Set the meter to the proper scale according the manufacturer's instructions. The reading will depend on the type of circuit being checked and the value of the end-of-line device. Examples follow.
b) The resistance of each Class B IDC and SLC will be equal to or a little less than the end-of-line device, usually between 1,000 ohms and 10,000 ohms, depending on the system. If a SLC does not have an end-of-line device, temporarily connect a resistor across the end of the circuit. Remove this resistor after the testing is complete.

c) The resistance of a Class B NAC circuit will be equal to or a little more than the end-of-line device in one direction, usually between 1,000 ohms and 10,000 ohms, depending on the system. With the meter leads reversed the resistance will be on the order of 50 ohms or less.

d) For a Class A circuit, connect an end-of-line device (resistor) across the return conductors. Then, follow instructions above. Remove this device after checking for an open circuit.

e) General troubleshooting procedures: At the control unit, connect two end-of-line devices in series across the pair of conductors measuring open. This will make it easy to determine the direction, electrically, of the open circuit. Go to a point "electrically" half way to the end of the circuit as shown on the shop drawings. Disconnect both the incoming and outgoing leads from the device. Determine which pair of conductors is an open circuit. Leave the device disconnected and insulate each of the four conductors. Continue to "halve" the circuit with the open (maximum resistance) until the circuit fault is located.

7.5 Short Circuits

a) Short circuits are detected when checking for open circuits. During the open circuit test the resistance should not read zero, or just a few ohms, which is a short circuit signature.

b) General troubleshooting procedures: At the control unit, connect two end-of-line devices in series across the pair of conductors that are shorted. For a Class A circuit, also connect a single end-of-line device across the returning conductors. This will make it easy to determine the direction, electrically, of the short circuit. Go to a point "electrically" half way to the end of the circuit as shown on the shop drawings. Disconnect both the incoming and outgoing leads from the device. Determine which pair of conductors is shorted. Leave the device disconnected and insulate each of the four conductors. Continue to "halve" the circuit with the ground until the short is located.

8.0 Finish Control Unit Installation

Following successful performance testing of all system wiring, complete the installation of the fire alarm control unit (FACU) as follows:

a) Mount electronic assemblies
b) Connect cables, as required
c) Terminate system wiring using shop drawings and manufacturer's literature, as required.
d) Mount door
e) Attach ground wire to door to assure proper system operation and FCC compliance.
f) Apply power
g) Program system functions using supplied documentation. Equipment suppliers often provide system programming as part of the contract. Special tools and software programs operated by factory-trained personnel are usually required, except for simple systems.
h) Where possible include system record documents within or adjacent to the FACP

9.0 Check System Operation

Use the following procedure (in the event that a written Test Plan is not provided) to test the operation of the fire alarm system. The actions taken will vary for new construction and retrofit installations. The procedure is based on retrofit work. Some steps can be omitted for new construction, prior to a certificate of occupancy being issued. Some systems may not include all tests described. Follow the operation/test procedures per the manufactures listed instructions for the system component under operational test. Document test results per NFPA 72 as applicable. See Annex B for Fire Alarm and Emergency Communication System Inspection and Testing Form (reprinted with permission from NFPA).

9.1 Notification of Testing

a) Notify Fire Department Dispatch
b) Notify building occupants
c) Notify monitoring facility if system is monitored off-premises

9.2 Control Unit Tests

a) Documentation
   - Have Record (As-Built) Drawings available.
   - Where possible include system record documents within or adjacent to the FACP
   - Make sure zone indicators are properly labeled
   - Control unit Manufactures listed system operations manual

   Note: *Detector locations and requirements must meet the mandatory requirements in NFPA 72 and follow location requirements that may be determined by the designer and as approved by the AHJ.*

b) Control unit in normal condition.
   - Power indicator on.
   - No trouble or alarm indicators on.

c) Operate lamp test switch.
   - All indicators on

d) Check for ground fault indication. [Connect a jumper from an initiating or signaling line circuit to ground (conduit, system cabinet, etc.].
   - Ground fault indicator on (if applicable).

e) Operate main breaker to disconnect AC power.
   - Make sure the location of breaker is indicated at control unit.
   - Power indicator is off.
   - Audible and visible trouble indicators on.
   - Location of circuit disconnecting means shall be permanently identified at control unit and a circuit breaker lock-on means shall be provided.

f) Operate trouble silence switch.
   - Audible trouble sounder silences.
   - Visible trouble indicator stays on

g) Restore normal power.
   - Power indicator on.
   - Audible and visible trouble indicators off.

h) Battery verification.
- Batteries dated (optional, but a good practice).
- Batteries same rating (or larger) as battery calculations in Record of Completion.
- Battery location recorded at control unit (if located remote from control).

i) Disconnects battery leads.
- Audible and visible trouble indicators on.
- Reconnect batteries.

j) Initiate an alarm from any device in the system.
- Alarm sounds.
- Proper identification of actuated device.

k) Operate alarm silence or acknowledge switch.
- Zone light or display stays on.

l) Initiate another alarm from a device on a different initiating device circuit.
- Alarm resounds.

m) Reset devices and operate system reset switch.
- System resets.
- Trouble indicators activate until alarm silence switch is returned to normal.

9.3 Field Device Test Preparation

a) This test normally requires two people: one person at the control unit and the other testing the field devices. Hand-held radios provide an efficient means of communication.

b) The person in the field performs a test. The person at the control unit notifies the person performing the test what occurred. Record result.

c) Review the system specifications/test procedures to insure the system operation is per the prescribed notification and alarm initiation requirements.

NOTE annex: Systems may have pre-signal, zoned notification and/or cross zone initiation requirements. Elevator recall, shunt trip breaker, etc.

c) All devices must be tested for alarm or supervisory function and indication verified at the control unit and all remote annunciators.

9.4 Monitoring for Integrity Tests (often referred to as circuit supervision)

9.4.1 Class "A" Wiring

a) Remove an initiating device (pull station, smoke detector, etc.) and disconnect both incoming wires (there should be 4 wires connected to the device).
- Audible and visible trouble indicators on.

b) Actuate the device.
- Alarms sound.
- Zoning identification verified.

c) Reset the operated device and system.

d) Replace those two wires and disconnect the two outgoing wires.

d) Actuate the device.
- Alarms sound.

e) Reconnect wires,

f) Connect one side of the device circuit to ground using a jumper wire.

- Visible and audible signal at control unit

g) Actuate the device.
   - Alarms sound.

h) Reset device, if required, and system.

i) Repeat “ground” test for other side of the device circuit.

j) Re-install the device and reset system.

k) Repeat wiring supervision test for each IDC, SLC, and NAC.

9.4.2 Class "B" Wiring

a) Remove an initiating device (pull station, smoke detector, etc.) and open the circuit by disconnecting one wire (there should be 4 wires connected to each device on the circuit, except for the end-of-line device—2 wires and end-of-line device).
   Note: *Removing a detector from its base will open the circuit and cause a trouble signal.*
   - Audible and visible trouble indicators on.

b) Reconnect the wire.

c) Reset the system.

d) Connect one side of the device circuit to ground using a jumper wire.
   - Audible and visible indicators on

d) Reset the device.

e) Repeat ground test for other side of the device circuit.

e) Reinstall the device.

f) Repeat wiring supervision test for IDC, SLC, and NAC.

9.5 Device Tests

9.5.1 Manual Fire Alarm Boxes (Pull Stations)

a) Actuate a pull station.
   - Alarms sound.
   - Zoning identification verified.

b) Repeat for each manual pull station in the system.

9.5.2 Smoke Detectors, Spot-type

a) Actuate a smoke detector using smoke or aerosol acceptable to the manufacturer. Do not test with magnets.
   - Alarm sounds.
   - Zoning identification verified.

b) Reset system.
   - System returns to normal standby condition.

c) Repeat smoke test for each smoke detector in system.

9.5.3 Smoke Detectors, Beam

a) Follow the manufacturers recommended test methods. Typically, these tests use a screen filter set for specific devices.

9.5.4 Smoke Detectors, Air Sampling

a) Follow the manufacturers recommended test methods.

9.5.6 Non-Restorable Fixed Temperature Heat Detector

a) Remove the device from it's mounting plate and short across the alarm contacts.
   - Alarm sounds.
   - Zoning identification verified.

b) Replace device.

c) Repeat for each non-restorable heat detector in system.

9.5.7 Restorable Fixed Temperature Heat Detector

a) Heat test using a hair dryer or approved heat detector tester.
   - Alarms sound.
   - Zoning identification verified.

b) Acceptance/Re-acceptance Tests -Repeat tests for each restorable heat detector in system.

c) Periodic Tests -Test 20% of restorable fixed temperature heat detectors. Be sure to log which detectors have been tested.

9.5.8 Rate of Rise Heat Detector

a) Heat test using a hair dryer or approved heat detector tester.
   - Alarm sounds.
   - Zoning identification verified.

b) Repeat for each rate-of-rise heat detector in system.

9.5.8 Rate Compensation Heat Detector

a) Heat test using a hair dryer or approved heat detector tester.
   - Alarm sounds.
   - Zoning identification verified.

b) Repeat for each rate compensation heat detector in system.

9.5.9 Restorable Line-Type Heat Detector

a) Heat test using a hair dryer or approved heat detector tester.
   - Alarm sounds.
   - Zoning identification verified.

b) Repeat for each restorable heat detector in system.

9.5.10 Non-Restorable Line- Type Heat Detector

a) Short across the conductors at the end of the heat detector cable.
   - Alarm sounds.
   - Zoning identification verified.

b) Repeat for each non-restorable line-type heat detector in system.

9.5.11 Flame Detectors

a) Follow the manufacturer’s recommended test methods.

9.5.12 Waterflow Switches

a) Open the Inspector's Test Valve and flow water.
   - Alarms sound within 90 seconds. (Time delay should be as short as possible. Adjust to avoid possible nuisance alarms due to pressure variations, surges, etc.)

b) Repeat for each waterflow switch in system.

9.5.13 Gas Detectors

a) Gas detectors shall be installed and maintained in accordance with the manufacturer's instructions.

9.5.14 Pressure-type Waterflow Device (Alarm)

a) Operate the alarm test bypass connection.
   - Alarms sound.

b) Repeat for each pressure-type waterflow switch in system.

9.5.15 High or Low Pressure Switch (Supervisory)

a) Operate the switch.
   - Supervisory signal is received when pressure increases or decreases by 70 kPa (10 psi).
   - Restoration of signal is received when pressure is back within 70 kPa (10 psi) of required pressure.

b) Repeat for each supervisory pressure switch in system.

9.5.16 Room Temperature Switch (Supervisory)

a) Operate the switch.
   - Supervisory signal is received when temperature is decreased to 4.4°C (40°F).
   - Restoration of signal is received when temperature is returned to above 4.4°C (40°F).

b) Repeat for each room temperature switch in system.

9.5.17 Water Temperature Switch (Supervisory)

a) Operate the switch.
   - Supervisory signal is received when temperature is decreased to 4.4°C (40°F).
   - Restoration of signal is received when temperature is returned to above 4.4°C (40°F).

b) Repeat for each water temperature switch in the system.

9.5.18 Water Level Switch (Supervisory)

a) Operate the switch.
   - Pressure Tank -supervisory signal is received when water level increases or decreases 100 mm (3 in.) from the required level.
   - Non-pressure Tank- supervisory signal is received when water levels falls 300 mm (12 in.) from the required level.
   - Restoration of signals is received when water levels are returned to normal levels.

9.5.19 Gate Valve Supervisory Switch

a) Turn valve toward closed position.
   - Supervisory signal within two revolutions.

b) Turn valve to full open position.
   - Supervisory signal restores.

c) Repeat for gate valve supervisory switches in system.

9.5.20 Post Indicator Valve Supervisory Switch

a) Turn valve toward closed position.
   - Supervisory signal within two revolutions.

b) Turn valve to full open position.
   - Supervisory signal restores.

c) Repeat for all other post indicator supervisory valves in system.

9.5.21 Other Supervisory Switches Type of Device

a) Operate device as appropriate.
   - Supervisory signal received.

b) Return device to normal position.
   - Supervisory signal restores.

c) Repeat for all other supervisory switches in system.

9.5.22 Audible Notification Appliances—General Alarm—Public Mode

Notification appliances must meet the applicable requirements in NFPA 72-16 in addition to all manufacturer's installation and maintenance requirements.

a) Place system in alarm condition.
b) Using a Sound Level Meter, verify sound level in all occupied spaces is 15 dBA above average ambient sound level or 5 dBA above maximum sound level lasting more than 60 seconds. (For sleeping rooms, 15 dBA over average ambient, 5 dBA over maximum lasting more than 60 seconds or 75 dBA, whichever is greater, measured at the pillow level.)

9.5.23 Emergency Voice/Alarm Communications Systems

Emergency communications systems are required to meet the applicable requirements contained in NFPA 72-24.

a) Verify alarm signal in selected areas {fire floor, floor above, floor below, etc.)
b) Manually place system in general alarm.
c) Verify alarms sound throughout building.
4. Verify each speaker zone for proper operation and identification.
5. Verify evacuation tone signals are 15 dBA above average ambient sound level or 5 dBA above maximum sound level lasting at least 60 seconds.
6. Verify clarity (intelligibility) of automatic voice message.
7. Verify clarity (intelligibility) of live voice signal.

9.5.24 Visible Notification Appliances

a) Place system in alarm.
b) Verify proper location, flash rate, and candela rating of each strobe in system.

9.5.25 Two-way T telephone Communications

a) Using a fire phone portable handset or fire warden station, verify proper operation from each fire phone location.

b) Verify communications is still understandable with 5 phone jacks plugged in (equivalent to 5 handsets off-hook).

9.5.26 Off-Premises Monitoring

Digital Alarm Communicator Transmitters (DACTs) are the most popular type installed for off-premises signaling. Test the DACT using the following tests. If other methods are used, follow the manufacturer's instructions and NFPA 72, Chapter 7 recommended test methods.

a) Disconnect one telephone line. DACT should report a trouble condition within 4 minutes.
b) Reconnect first telephone line. System should return to normal condition.
c) Disconnect second telephone line. DACT should report a trouble condition within 4 minutes.
d) Turn DACT primary power breaker off.
e) Verify trouble condition.
f) Reconnect DACT primary power.
g) Disconnect DACT secondary power.
h) Verify trouble condition.
i) Reconnect DACT secondary power.
j) Transmit an alarm for each zone of the DACT
k) Call monitoring facility to verify receipt of signals and have them place system back in service.

9.6 Finalize Job

a) Fill out Record of Completion
b) Update Drawings of Record
c) Instruct owner’s representative on system operation. The equipment supplier often provides customer training.
d) Notify local authority job is ready for inspection and acceptance.

10.0 Inspect, Test, and Maintain

10.1 Code References: NFPA 72, Chapter 14

Note: The Inspection and Testing Form (NFPA 72, Figure 10.6.2.3) is available from afaa.org; Automatic Fire Alarm Association, 168 Henderson Woods Drive, Jasper, GA 30143.

10.2 General Procedures

After acceptance by the authority having jurisdiction, the ongoing inspection, testing and maintenance begins. NFPA 72, Chapter 14 contains the requirements. Manufacturer's instructions may provide specific procedures or test equipment required. Local code or other authorities having jurisdiction (insurance, hospital) may have additional requirements.

10.3 Qualifications of Service Personnel

NFPA 72, section 14.2.3.6 identifies examples of personnel qualified to service fire alarm systems.

10.4 Inspection

NFPA 72 requires periodic visible inspection of fire alarm equipment. Visible inspections ensure that there are no changes that affect equipment performance. NFPA 72, Table 14.3.1, Visible Inspection Frequencies, provides the frequency of inspection for the various types of fire alarm equipment.

10.5 Testing

NFPA 72 requires periodic testing of fire alarm equipment. NFPA 72, Table 14.4.3.2, Testing Frequencies, provides the frequency of tests for the various types of fire alarm equipment. NFPA 72 Table 14.4.3.2 contains the test methods used in testing the fire alarm system.

10.6 Maintenance

a) Maintain the fire alarm according to manufacturer's instructions.
b) Clean the equipment as required by local conditions.

10.7 Records (Inspection, Testing, and Maintenance)

a) Retain records until the next test and for 1 year thereafter.
b) Make a permanent record of each test.
    1) Date
    2) Test frequency
    3) Name of property
    4) Address
    5) Name of person performing inspection, maintenance, tests, or combination thereof, and affiliation, business address, and telephone number
    6) Name, address, and representative of approving agency(ies)
    7) Designation of the detector(s) tested. For example, "Tests performed in accordance with Section _____."
    8) Functional test of detectors
    9) Functional test of required sequence of operations
    10) Check of all smoke detectors
    11) Loop resistance for all fixed-temperature, line-type heat detectors
    12) Other tests as required by the equipment manufacturer's published instructions

13) Other tests as required by the authority having jurisdiction
14) Signatures of tester and approved authority representative
15) Disposition of problems identified during test (e.g., owner notified, problem corrected/successfully retested, device abandoned in place)

10.8 Cautions

a) Look for changes in building construction during visible inspections, such as, partitions and high cabinets. Look for relocated furnishing that are obstructing the use of or obscuring the view of devices and appliances (e.g., plants placed in front of manual fire alarm boxes).
b) Test the functionality of smoke detectors using an aerosol, or other method recommended by the manufacturer. Use of a test button or magnet does not verify smoke entry, but can test the internal circuitry.
c) Test the sensitivity of smoke detectors using methods described in manufacturer's instructions. Addressable analog smoke detector sensitivity may be measured using the listed control unit. Do not use a magnet to test smoke detector sensitivity, unless the manufacturer's instructions indicate the magnet is listed as a prescribed sensitivity test method.

Annex A: Reference Standards

National Fire Protection Association
1 Batterymarch Park
P.O. Box 9101
Quincy, MA 02269-9101
(800) 344-3555
www.nfpa.org

NFPA 72-2016, *National Fire Alarm Code* (ANSI)

NFPA 70-2017, *National Electrical Code* (ANSI)

NFPA 90A-2015, *Standard for the Installation of Air-Conditioning and Ventilating Systems* (ANSI)

NFPA 101-2015, *Life Safety Code* (ANSI)

Institute of Electrical and Electronics Engineers
445 Hoes Lane, P.O. Box 1331
Piscataway, NJ 08855-1331
(800) 678-4333
www.ieee.org

Figure 1
[Source: NJATC Fire Alarms (S130-1999), Figure 1-5]

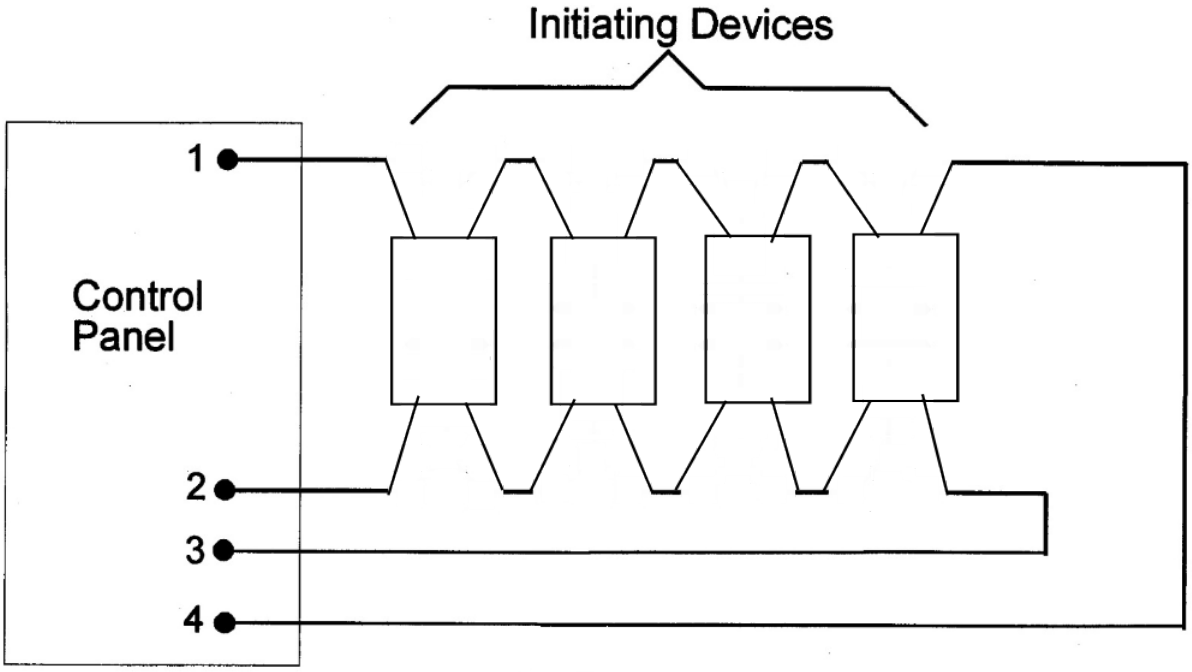

Figure 2
[Source: NJATC Fire Alarms (S130-1999), Figure 1-4]

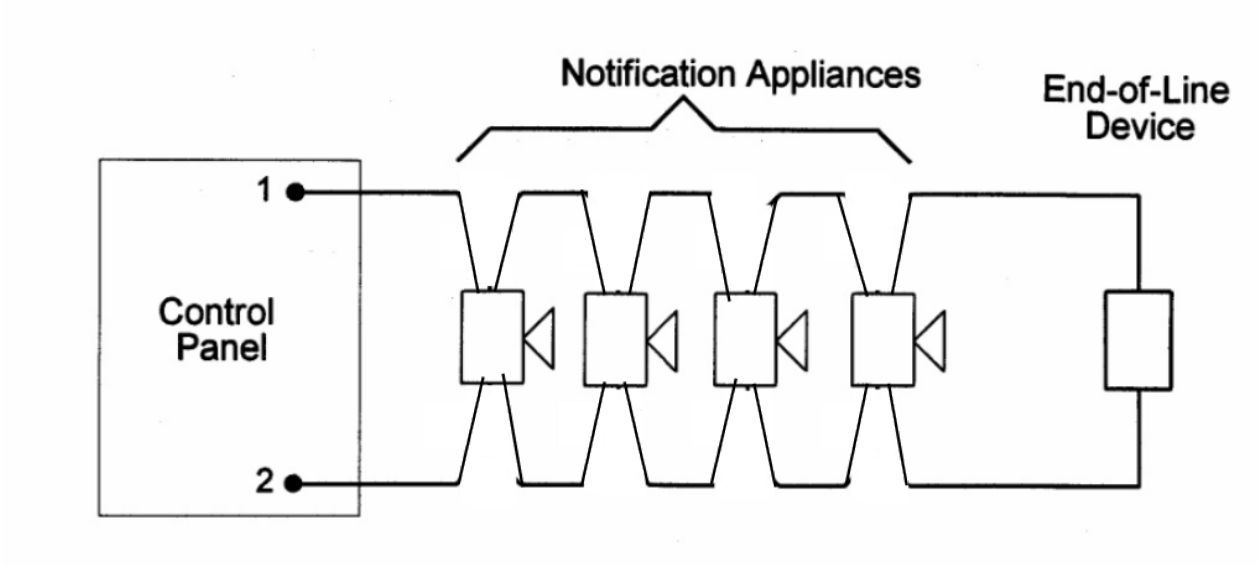

Figure 3
[Source: NFPA 72-2007, Annex A, Figure A.5.4.7(a)]

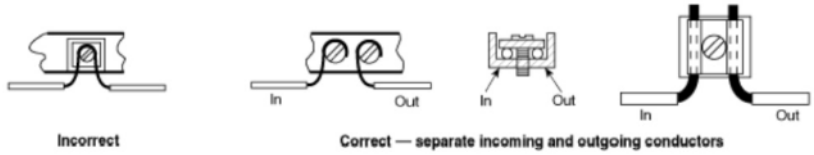

Figure 4
[Source: NFPA 72-2007, Annex A, Figure A.5.4.7(a)]

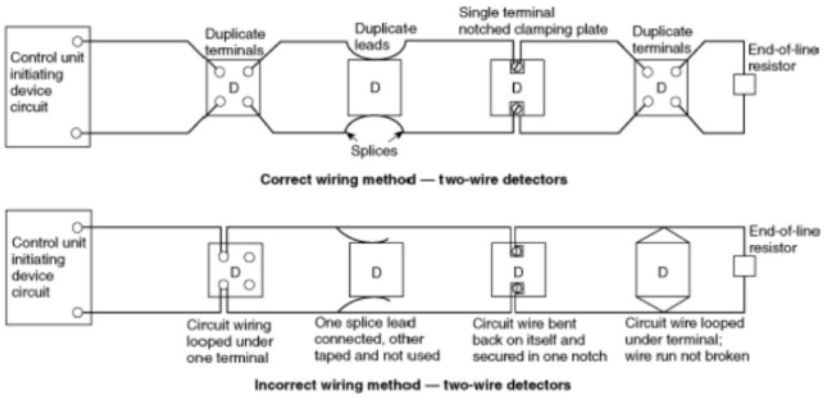

Figure 5
[Source: NFPA 72-2007, Annex A, Figure A.5.4.7(b)]

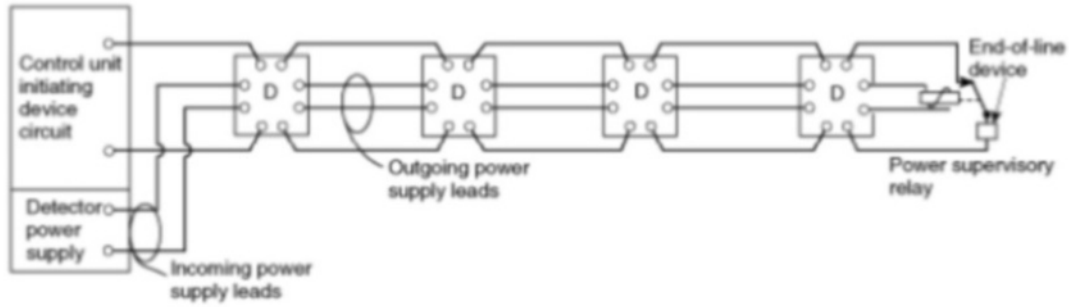

Illustrates four-wire smoke detector employing a four-wire connecting arrangement. Incoming and outgoing leads or terminals for both initiating device and power supply connections. Wire run broken at each connection to provide supervision.

Figure 6
[Source: NFPA 72-2007, Annex A, Figure A.5.6.3.1]

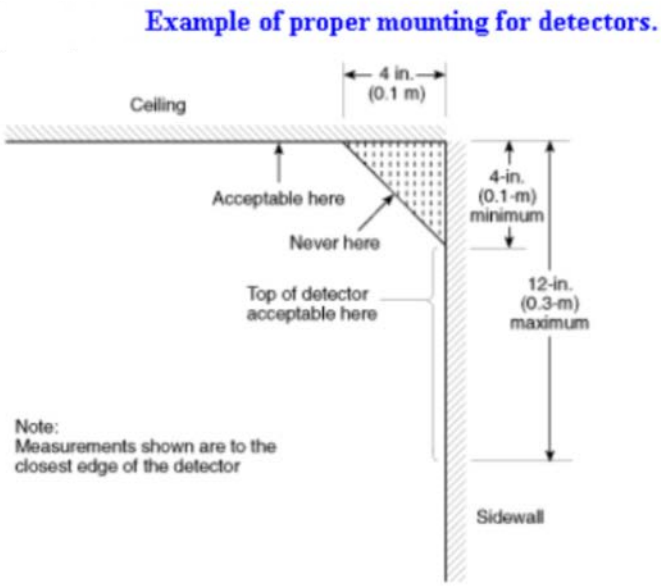

Figure 7
[Source: NEMA Guide for Proper Use of System Smoke Detectors, Figure 5-2]

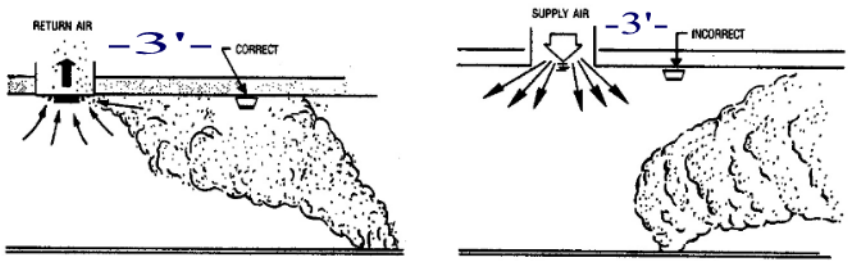

Detector Placement – Air Supply and/or Return Ducts

Figure 8
[Source: NFPA 72-2007, Annex A, Figure A.5.4.6.1]

Smoke or heat detector spacing layout, sloped ceilings (peaked type).

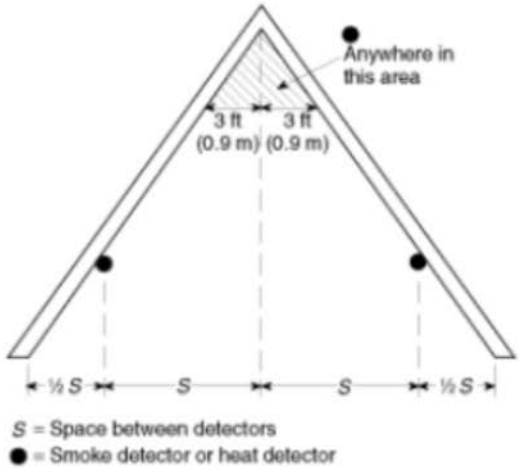

Figure 9
[Source: NFPA 72-2007, Annex A, Figure A.5.7.3.4]

Maximum distance at which ceiling-suspended light projector and receiver can be positioned from end wall is one-quarter selected spacing *(S)*.

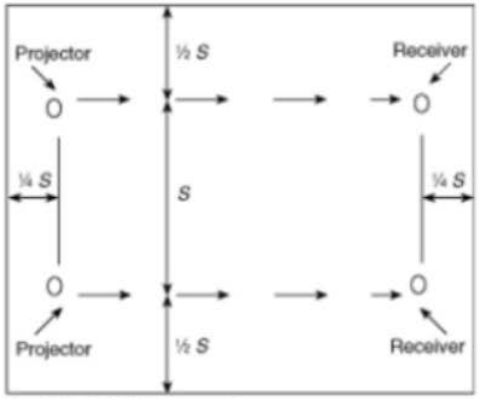

S = Selected detector spacing

Figure 10
[Source: NFPA 72-2007, Annex A, Figure A.5.16.5.2(b)]

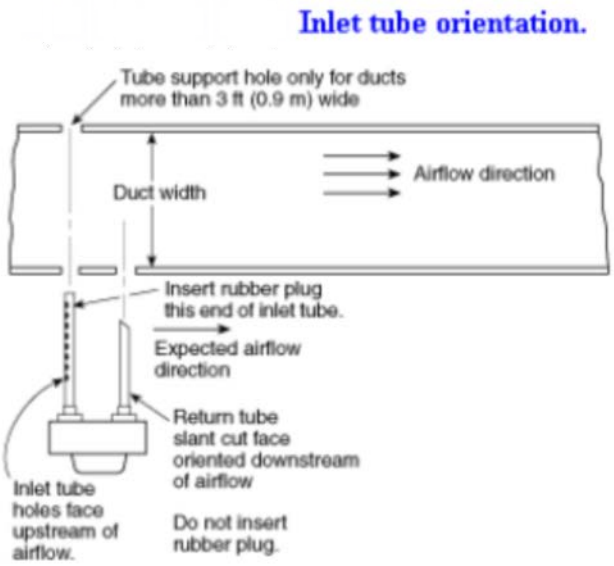

Figure 11
[Source: NFPA 72-2007, Annex A, Figure A.5.16.5.2(a)]

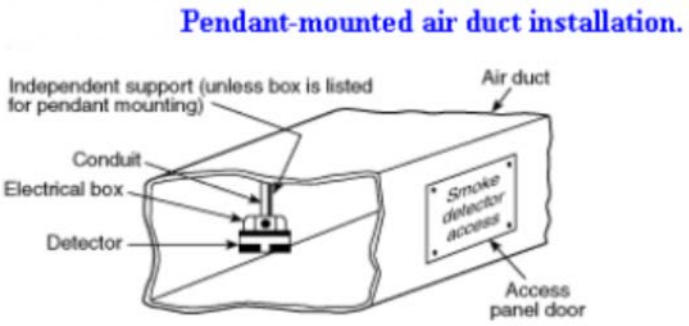

Figure 12
[Source: NFPA 72-2007, Annex A, Figure A.5.16.4.2.2(a)]

Location of a smoke detector(s) in return air system openings for selective operation of equipment.

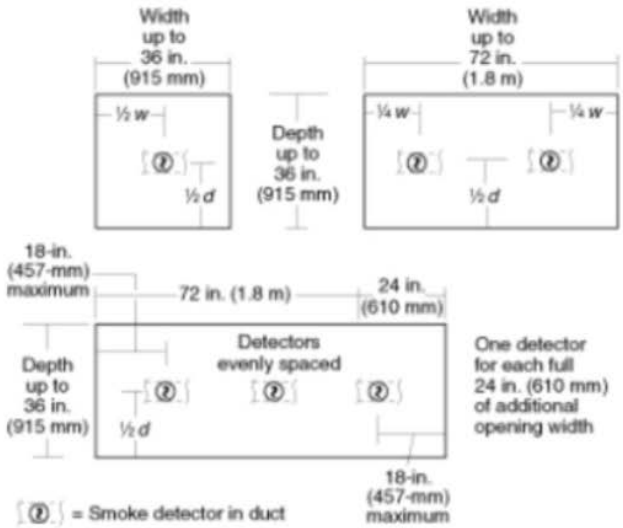

Figure 13
[Source: NFPA 72-2007, Annex A, Figure A.5.6.5.1(a)]

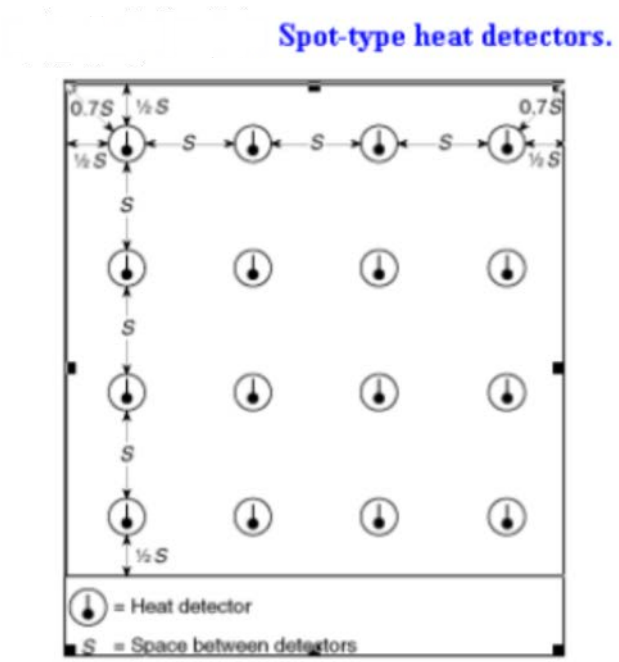

Insert Annex B here

Fire Alarm and Emergency Communication System Inspection and Testing Form