NECA 781-201x

Recommended Practice for Installing and Maintaining Lightning Protection Systems

Second Ballot Draft

August 2017

Table of Contents

<This page intentionally left blank>

Foreword

National Electrical Installation Standards™ *(NEIS®)* are designed to improve communication among specifiers, purchasers, and suppliers of electrical construction services. They define a minimum baseline of quality and workmanship for installing electrical products and systems. *NEIS* are intended to be referenced in contract documents for electrical construction projects. The following language is recommended:

Lightning protection systems shall be installed and maintained in accordance with NECA 781, *Recommended Practice for Installing and Maintaining Lightning Protection Systems* (ANSI).

Use of *NEIS* is voluntary, and the National Electrical Contractors Association assumes no obligation or liability to users of this publication. Existence of a standard shall not preclude any member or non-member of NECA from specifying or using alternate construction methods permitted by applicable regulations.

This publication is intended to comply with the National Electrical Code (NEC) and with the requirements contained in NFPA 780 *Standard for the Installation of Lightning Protection Systems*. Because they are quality and performance standards, *NEIS* may in some instances go beyond the minimum safety requirements of the NEC. It is the responsibility of users of this publication to comply with state and local electrical codes when installing electrical products and systems.

Suggestions for revisions and improvements to this standard are welcome. They should be addressed to:

NECA Standards & Safety
3 Bethesda Metro Center, Suite 1100
Bethesda, MD 20814
(301) 215-4546
(301) 215-4500 Fax
www.neca-neis.org
neis@necanet.org

To purchase *National Electrical Installation Standards*, contact the NECA Order Desk at Phone: (301) 215-4504 or Fax: (301) 215-4500, or orderdesk@necanet.org. *NEIS* can also be purchased in electronic download format at www.neca-neis.org/standards.

1. Scope

1.1 Included

This standard covers quality and performance criteria and best practices for lightning protection system design and installation for both new construction and existing structures. The basic components of lightning protection systems are covered as well as basic information related to lightning protection system design and system maintenance.

1.2 Regulatory and Other Requirements

(a) Regulatory. All information in this publication is intended to conform to the NFPA 780 *Standard for the Installing Lightning Protection Systems*, LPI-175 Standard of Practice for the DESIGN-INSTALLATION-INSPECTION of lightening protection systems, and any applicable requirements in the NFPA 70 *National Electrical Code*®. Installers shall follow and apply the applicable requirements contained in lightning protection standards such as those mentioned above and NFPA 70, in addition to any applicable state and local codes, and manufacturer's instructions when installing electrical equipment and systems.

(b) Training and Experience. Installation of lightning protection systems requires special skills and training. Only trained and experienced personnel familiar with the construction and installation of lightning protection systems and associated equipment should perform the technical work described in this publication. Some regulatory bodies may require certification or licenses that demonstrate credentials and experience. Administrative functions and other tasks can be performed under the supervision of a trained and experienced person. See Annex A of NFPA 780.

(c) Qualified Persons. Installations of surge protective devices (SPDs) and other portions of the lightning protection system that are covered by NFPA 70 National Electrical Code and NFPA 70E, *Standard for Electrical Safety in the Workplace* (ANSI). These portions of the system installation shall be performed by qualified persons and shall be in accordance with the applicable provisions of the NEC and NFPA 70E.

Note: The term “Qualified Person” is defined in both the National Electrical Code and NFPA 70E Standard for Electrical Safety in the Workplace.

(d) Workmanship. General requirements for installing electrical products and systems are described in NECA 1, *Standard for Good Workmanship in Electrical Construction* (ANSI) and not all provisions in NECA 1 would apply to lightning protection system installations. Other *National Electrical Installation Standards* provide additional guidance for installing particular types of electrical products and systems. NECA 781 provides workmanship provisions for lightning protection systems including system design, maintenance, quality, and performance criteria. A complete list of *NEIS* is provided in Annex E.

(e) Safety in the Workplace. In addition to electrical safety in the workplace rules in NFPA 70E mentioned above, work covered under the scope of this standard shall be performed in accordance with the applicable safety regulations governed by Occupational Safety and Health Administration (OSHA).

Note: Occupational Safety and Health Administration (OSHA) publishes safety regulations for fall

protection, heat stress, exposure to silica and other dusts, and so forth.

1.3 Mandatory and Permissive Requirements, Quality and Performance Recommendations, Explanatory Material, and Informative Annexes

(a) Mandatory Requirements. Mandatory requirements in manufacturer's instructions, or of Codes or other mandatory Standards that may or not be adopted into law, are those that identify actions that are specifically required or prohibited and are characterized by the use of the terms *must* or *must not*, *shall* or *shall not*, or by the use of positive phrasing of mandatory requirements. Examples of mandatory requirements may equally take the form of, "equipment must be protected . . .," "equipment shall be protected . . .," or "protect equipment . . .," with the latter interpreted (understood) as "it is necessary to protect equipment . . ."

(b) Permissive Requirements. Permissive requirements of manufacturer's instructions, or of Codes or other mandatory Standards that may or not be adopted into law, are those that identify actions that that are allowed but not required, are normally used to describe options or alternative means and methods, and are characterized in this Standard by the use of the terms *are permitted* or *are not required.*

(c) Quality and Performance Recommendations. Quality and performance recommendations identity actions that are recommended or not recommended to improve the overall quality or performance of the installation and are characterized by the use of the term *should* or *should not.*

(d) Explanatory Material. Explanatory material, such as references to other Codes, Standards, or documents, references to related sections of this Standard, information related to another Code, Standard, or document, and supplemental application and design information and data, is included throughout this Standard to expand the understanding of mandatory requirements, permissive requirements, and quality and performance recommendations. Such explanatory material is included for information only, and is Identified by the use of the term "Note:"

(e) Informative Annexes. Non-mandatory information, other reference standards or documents relative to the application and use of materials, equipment, and systems covered by this Standard are provided in informative annexes. Informative annexes are not part of the enforceable requirements of this Standard, but are included for information purposes only.

2. Definitions

Approved Acceptable to the authority having jurisdiction. [NFPA 780]

ANSI The American National Standards Institute (ANSI). A United States standards organization responsible for promoting and facilitating voluntary consensus standards and safeguarding their integrity.

Air Terminal A strike termination device that is a receptor for the attachment of flashes to the lightning protection system and is listed for the purpose. [NFPA 780]

Authority Having Jurisdiction (AHJ) An organization, office, or individual responsible for enforcing the requirements of this code or standard, or for approving equipment, materials, an installation, or a procedure. [NFPA 780]

Bonding An electrical connection between an electrically conductive object and a component of a lightning protection system that is intended to significantly reduce potential differences created by lightning currents. [NFPA 780]

Conductor

> **Bonding Conductor** A conductor used for potential equalization between grounded metal bodies or electrically conductive objects and a lightning protection system. [NFPA 780]
>
> **Counterpoise Conductor** A bare underground electrical conductor providing an area of protection from the effects of lightning for underground raceway(s) or cable(s). [NFPA 780]
>
> **Down conductor** A main conductor that carries lightning currents from the top of the structure to grounding electrodes. [NFPA 780]
>
> **Loop Conductor** A conductor encircling a structure that is used to interconnect grounding electrodes, main conductors, or other electrically conductive bodies. [NFPA 780]
>
> **Main Conductor** A conductor intended to be used to carry lightning currents between strike termination devices and grounding electrodes. [NFPA 780]
>
> **Roof Conductor** A conductor used to interconnect strike termination devices. [NFPA 780]

Exothermic(s) A process that produces a welded connection between a conductor and other objects.

Ground Access Well A protective enclosure that allows access to inspect and test an individual grounding electrode or grounding electrode system.

Grounding Electrode. The portion of a lightning protection system, such as a ground rod, ground plate electrode, or ground conductor, that is installed for the purpose of providing electrical contact with the earth. [NFPA 780]

Labeled Equipment or materials to which has been attached a label, symbol, or other identifying mark of an organization that is acceptable to the authority having jurisdiction and concerned with product

evaluation, that maintains periodic inspection of production of labeled equipment or materials, and by whose labeling the manufacturer indicates compliance with appropriate standards or performance in a specified manner. [NFPA 780]

Lightning Protection Institute Inspection Program LPI-IP Master installation certificate which provides independent third party evidence that a lightning protection system design and installation was found to be in complete compliance with an inspection standard(s).

Lightning Protection System A complete system of strike termination devices, conductors (which could include conductive structural members), grounding electrodes, interconnecting conductors, surge protective devices, and other connectors and fittings required to complete the system. [NFPA 780]

Listed Equipment, materials, or services included in a list published by an organization that is acceptable to the authority having jurisdiction and concerned with evaluation of products or services, that maintains periodic inspection of production of listed equipment or materials or periodic evaluation of services, and whose listing states that either the equipment, material, or service meets appropriate designated standards or has been tested and found suitable for a specified purpose. [NFPA 780]

UL Lightning Protection Inspection Certificate An Underwriters Laboratories inspection certificate which provides independent third party evidence that a lightning protection system design and installation was found to be in complete compliance with an inspection standard.

NFPA 780 *Standard for the Installation of Lightning Protection Systems* An ANSI recognized installation standard for lightning protection systems.

Side Flash An electrical spark, caused by differences of potential, that occurs between conductive metal bodies or between conductive metal bodies and a component of a lightning protection system. [NFPA 780]

Strike Termination Device A conductive component of a lightning protection system capable of receiving a lightning strike and providing a connection to a path to ground. Strike termination devices include air terminals, metal masts, permanent metal parts of structures as described in 4.6.1.4, and overhead ground wires installed in catenary lightning protection systems. [NFPA 780]

Surge Arrester A protective device for limiting surge voltages by discharging or bypassing surge current; it also prevents continued flow of follow current while remaining capable of repeating these functions. [NEC]

Surge-Protective Device (SPD). A protective device for limiting transient voltages by diverting or limiting surge current; it also prevents continued flow of follow current while remaining capable of repeating these functions and is designated as follows:

Type 1: Permanently connected SPDs intended for installation between the secondary of the service transformer and the line side of the service disconnect overcurrent device.

Type 2: Permanently connected SPDs intended for installation on the load side of the service disconnect overcurrent device, including SPDs located at the branch panel.

Type 3: Point of utilization SPDs.

Type 4: Component SPDs, including discrete components, as well as assemblies.

Informational Note: For further information on Type 1, Type 2, Type 3, and Type 4 SPDs, see UL 1449, Standard for Surge Protective Devices. [NFPA 70 NEC]

Thru-Roof A connection device that assists in creating a water tight seal when penetrating a roof.

Thru-Wall - A connection device that assists in creating a water-tight seal when penetrating a wall.

Shall Indicates a mandatory requirement. [NFPA 780]

Should Indicates a recommendation or that which is advised but not required. [NFPA 780]

Zone of Protection The space adjacent to a lightning protection system that is substantially immune to direct lightning flashes. [NFPA 780]

3. Receiving, Storage, and Protection of Material

3.1 Receiving Material on Site

a) Material and equipment shall be carefully unloaded, observing all packing label warnings.

b) Packages with packing slips and/or purchase orders shall be inventoried. Back orders shall be documented and new shipping schedules verified. If approved project data (shop drawings) are used, check all products for completeness and timely delivery. Expedite or otherwise resolve the product delivery schedule problems.

c) Leaving protective coverings in place as much as possible, shipment shall be opened and inspected completely and, as quickly as possible, recovery of loss due to shipping damage shall be initiated. Undamaged material shall be carefully repacked, unless intended for immediate installation.

NOTE: Depending on specifications, company policy or project circumstances, it may be necessary to receive, unpack and check all material at the company shop or other staging area, in which case careful repackaging is essential.

3.2 Storage and Protection

a) Material shall be stored in a clean, dry and secure location. Especially avoid spaces were water might accumulate or where significant airborne dust or dirt is present. If such a location is not available, material shall be stored on pallets or other means to rise above floor and possible water levels, and wrapped in protective plastic sheeting.

b) Observing warnings and stacking instructions and information such as project destination, voltage, job tags, or labels for easy reference and access.

c) Storage shall be organized with essential information such as project destination, voltage, job tags, or labels for easy reference and access.

d) Boxes that are partially crushed shall not be stacked even if the products are intact.

e) Should any event, such as a water leak, occur that could damage stored material, the affected material shall be re-inspected for damage and necessary replacements shall be obtained.

f) Copper and stainless steel materials shall be protected from contact with ferrous metals to reduce reactions between dissimilar metals. Where possible the above materials should be stored in locations not vulnerable to physical damage or not readily accessible to the public.

4. Fundamentals and Design Procedures

4.1 Lightning Protection Fundamentals. Lightning strikes can cause damage to buildings or structures and electrical wiring systems installed within those buildings. Lightning protection systems consist of a low-impedance network of strike termination devices that are suitably connected to a special grounding electrode system installed just for dissipating lightning into the earth. Lightning protection systems are designed and installed in an effort to divert lightning around the building or structure and equipment so as to be safely dissipated into the earth. Full details and information about installations of lightning protection systems are beyond the scope of this standard, but the essentials are covered along with information that clarifies what constitutes good workmanship related to lightning protection system installation, design, and maintenance.

4.1.1 Purpose of Lightning Protection. Lightning protection systems provide a deliberate pathway to ground for anticipated lightning events. The lightning protection system must be capable of dissipating the high energy as effectively and directly to ground (earth) as possible. The installation of a lightning protection system is no guarantee that all equipment inside a building or structure or the building itself will not be damaged by a lightning strike. The system provides a best-made plan to provide a reasonable degree of protection from these events.

Lightning is an unpredictable force that is continuously being studied. NFPA 780 *Standard for the Installation of Lightning Protection Systems* and LPI 175 *Standard of Practice for the Design – Installation – Inspection of Lightning Protection Systems* indicate the purpose of lightning protection is to provide safeguarding of persons and property from hazards arising from lightning exposure. Lightning protection systems do not prevent lightning strikes, nor do they attract lightning. A lightning protection system simply provides a preferred low impedance path for shunting the lightning to ground minimizing damage to the protected structure. Some current will flow into the structure, especially from strike to an incoming line, requiring potential equalization and surge protection systems. Several concepts related to how the system is intended to perform. First, the system intercepts a lightning strike through the strike termination devices. Then the force is diverted safely down to the earth. This process is accomplished by the specific down conductors or structural components of the building that serve as down conductors. It is important that bonding is provided from conductive parts on or within the building or structure to reduce flash-over possibilities during the event. The grounding electrodes of a lightning protection system provide the dissipation safely into the ground (earth). Effectively installed surge protective devices handle any unwanted transient surges attempting to enter the building via the electrical supply system via the electrical power system, communications system, or antenna systems.

4.2 System Design. The design shall be in accordance with the applicable requirements set forth in NFPA 780, *Standard for the Installation of Lightning Protection Systems,* LPI 175 *Standard of Practice for the Design – Installation – Inspection of Lightning Protection Systems*. Any individual, company or contractor involved with lightning protection system design and installation should be familiar with the construction and installation of building construction, lightning protection systems, electrical power systems, and related equipment, should perform the technical work described in this standard. Designers should also have experience with use and application with NFPA 780 and LPI 175 in both design and installation processes. See figures 4.2.1 and 4.2.2 for examples of shop drawing design and details.

Generally, it is not advisable to rely on the lightning protection design information provided with the original plans because often this does not meet the standard. The engineer or designer providing the original drawing may not be sufficiently trained in lightning protection design, see figure 4.2.3. It is also common that the information provided at the time of the original design may have altered significantly especially as items change on the rooftop

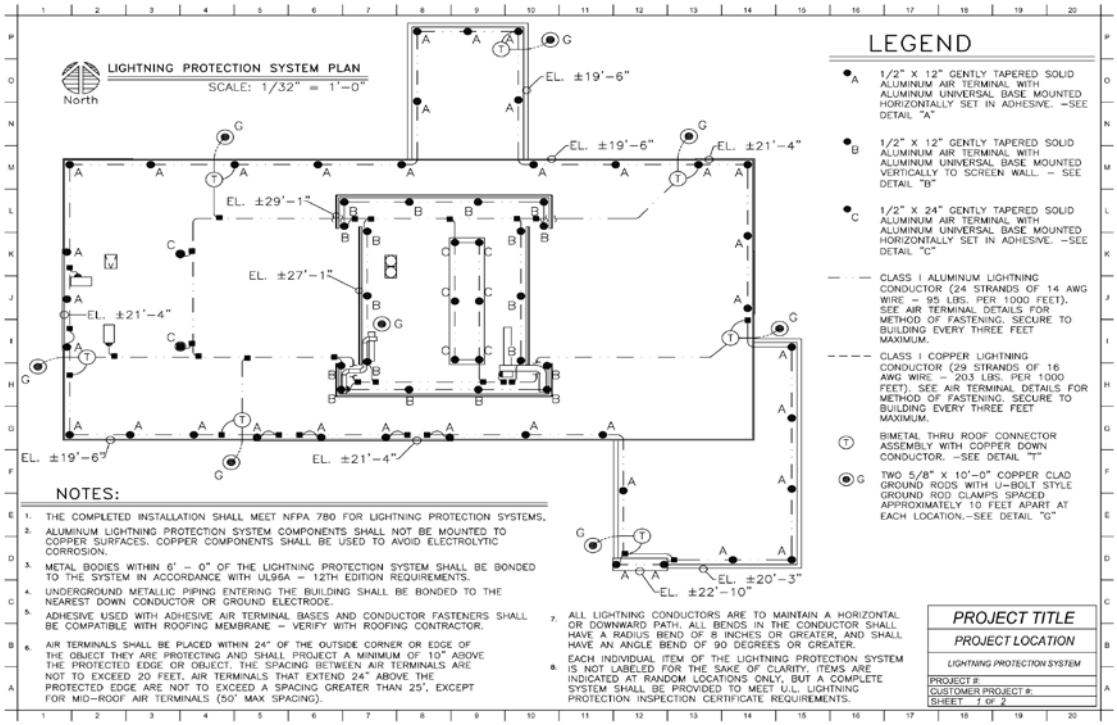

Figure 4.2.1 Sample shop drawings building top view and details

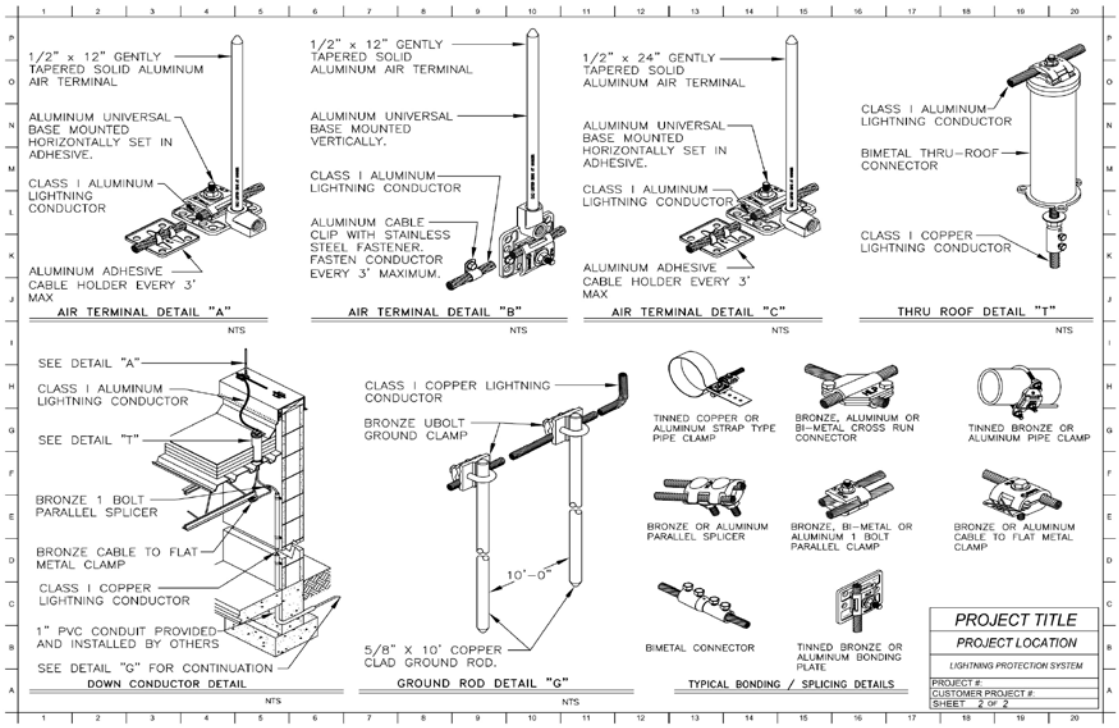

Figure 4.2.2 Sample detail views of components and connections

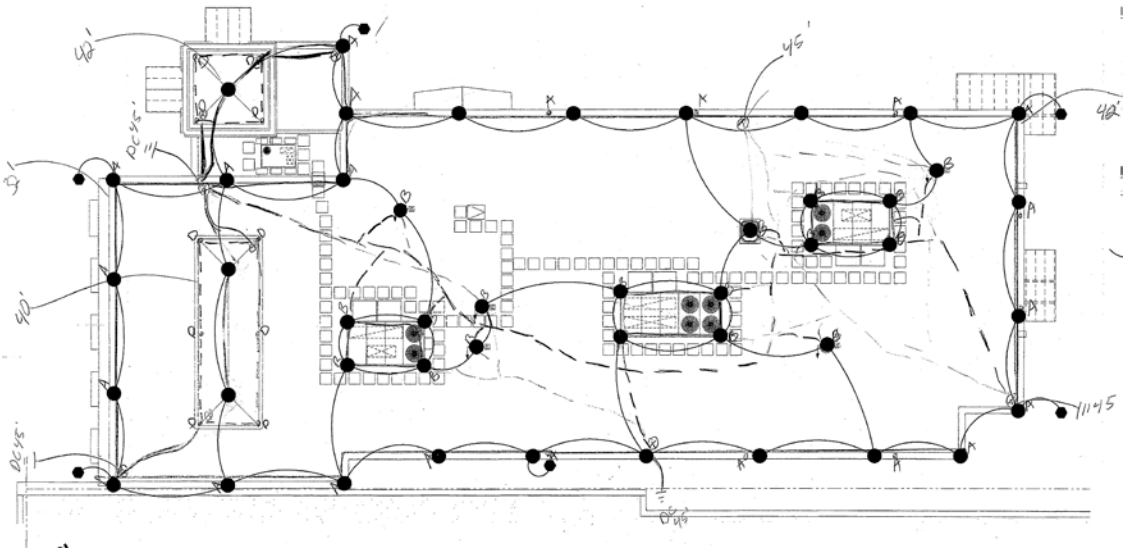

Figure 4.2.3 Sample drawing showing insufficient information adequate for installation

Lightning protection systems are designed specifically and uniquely for the building or structures they are intended to protect. The design is not only impacted by the size and shape, but also by building systems and structural components. The lightning protection designer should be familiar with all facets of the structure or building construction. Often changes in the field result in system installations that will differ

slightly than as shown in the original plans and specifications. Any changes to an original system design must be coordinated with the original designer or engineering firm.

4.3 Lightning Protection System Components. Lightning protection systems include several conductors and components that make up the entire system. Starting from the top of a structure and working toward the ground, the system includes a strike termination network (usually called air terminals, strike termination devices, or lightning rods), a down conductor network, a grounding terminal or grounding electrode network, an equipotential bonding network, and appropriate surge protection devices (SPDS). Surge protection must be installed the power system or service, phone, coaxial cable for CATV systems, and so forth. Reference NFPA 780, UL96A & LPI175 for installation standards regarding requirements for surge protection devices (SPDs)

4.4 System Material Classes. There are two classes of materials and components used in lightning protection systems. Class II materials and components must be used in buildings greater than 23 m (75 ft) in height, and Class I materials are used on structures 23 m (75 ft) in height or less. Class I materials are typically smaller and lighter than the Class II materials. The height of roof equipment, antennas, and light poles can put a structure less than 75’ tall into a class II lightning protection classification. Copper or aluminum conductors can be used, but attention must be given to areas subject to corrosive influences. The conductors used for lightning protection systems have a finer woven stranding characteristic than those typically used for electrical wiring systems.

5.0 Installation

5.1 General. The installation shall be in accordance with the requirements set forth in NFPA 780 and shall be installed in a neat and workmanlike manner. Both NFPA 780 *Standard for the Installation of Lightning Protection Systems* and NFPA 70 *National Electrical Code* require good workmanship for the installations covered by each standard. Each standard stops there and does not describe the details of good workmanship or what constitutes good workmanship. Thus the need for this workmanship, quality, performance standard. NECA-1 *Standard for Good Workmanship in Electrical Construction* provides baseline information and guidelines about what constitutes good workmanship in electrical construction as covered by the NEC. The workmanship provisions in NFPA 780 and NFPA 70 may differ with respect to certain conformance and performance that must be achieved as required in each standard. For example, while the NEC does not restrict sharp bends in conductors, such as training and dressing conductors within a panelboard or switchboard, NFPA 780 would not permit sharp bends because it would compromise system performance.

5.2 Installation Methods and Criteria

Starting from the top and working downward to earth, the lightning protection system provides strike terminations devices. In general, each strike termination device must be provided with two paths to the ground. A “main size” conductor has to be used between strike termination devices and for the down conductors. Both LPI 175 and NFPA 780 provides the minimum size required for main conductors of roof conductors and down conductors. A low-impedance path is necessary in the down conductor network to reduce opposition in this path to earth. Care should be taken to minimize the number of bends in conductors and assure that any necessary bends are long radius (as gradual as possible). The bending radius must never be less than 200 mm (8 in.). Sharp bends invite flashover possibilities. If the voltage of a strike exceeds the breakdown voltage of air space between a down conductor and another conductive object, a side flash can occur during a lightning strike. Both NFPA 780 and LPI 175 provide a formula that simplifies the calculation required to determine the probability of side flash. Network conductors on the roof in addition to the down conductors of the system must be securely fastened at appropriate intervals. At least two down conductors must be installed for a lightning protection system. For structures exceeding 76.2 m (250 ft) in perimeter, additional down conductors must be installed. Down conductors should be as widely separate as possible and at the corners of a building or structure. Another consideration of locating down conductors is in public places or public traffic areas.

Good installation practices always strive to locate the down conductors away from these areas or provide suitable protection around the down conductor. The ground network of a lightning protection system provides a low-impedance connection to the earth. This low-impedance connection through multiple ground terminals helps minimize peak voltages that would be present on the system during an event. The ground network must be designed and installed so as to reduce the possibilities of step and touch potentials. The grounding electrode network of the lightning protection system is often a contributor to increased levels of over voltage that could be present during system operation if the ground connection(s) are not effective. An ineffective grounding network will create opposition to the quick and safe dissipation of a lightning strike. Each down conductor must be terminated to a grounding electrode dedicated to the lightning protection system. The grounding electrodes can be copper, copper-clad steel,

or stainless steel types. Electrodes of the ground network can be rods, rings, plates, radials, and concrete-encased electrodes. Connections to the electrodes have to be made by exothermic welding, bolting, brazing, or high compression connections listed for the application. Grounding clamps listed for direct burial application are permitted. Where possible, the electrodes should be installed below the frost line. As previously reviewed, the ground network of the lightning protection system must be bonded to the grounding electrode system for the power service supplying the building or structure.

5.3 Pre-Construction Site Assessment

Once the submittal drawings have been reviewed or approved and before construction begins, a pre-construction site assessment meeting should be conducted to review important aspects of the installation such as the location and placement of ground electrodes and down conductors. Other important considerations such as the responsibility for sealing thru-roof penetrations and installation of adhesive mounting pads, (if required), should be discussed. Responsibility for any surge protective devices (SPDs) installation should be determined during the pre-construction meeting to ensure qualified persons perform such work within electrical power system enclosures. It is usually a good idea for an owner representative or supervising engineer/designer to be in attendance at this meeting.

5.4 Ground Electrode Installation and Bonding

Ground electrodes shall be installed in accordance with NFPA 780 and common bonding between all building electrode systems shall be installed in accordance with NFPA 780 and NEC 70, National Electrical Code. For purposes of testing and maintenance, it is recommended that access to each ground electrode be provided. For driven ground rods, this access may be provided with the use of a ground access well, see figure 5.4-1

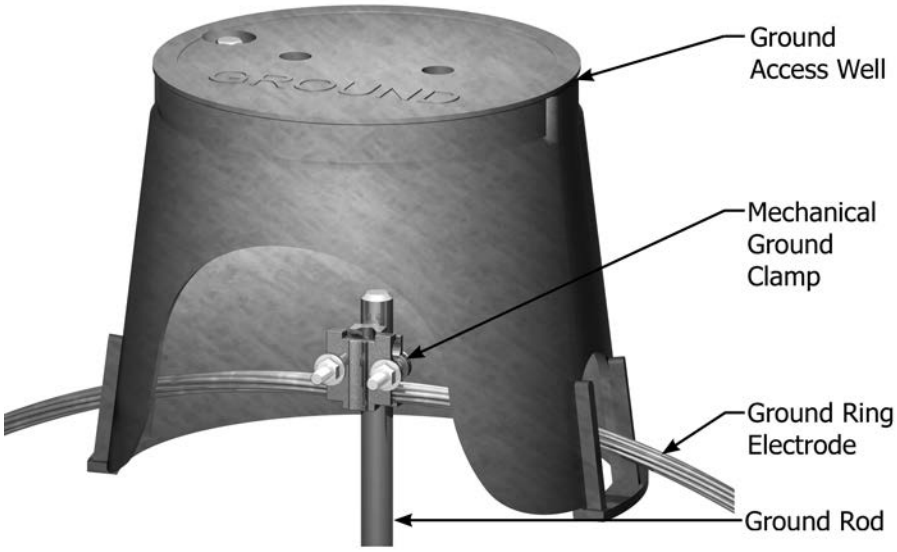

Figure 5.4-1 Access well cutaway view

Ground rods should be driven far enough away from the foundation wall to avoid the footing and drain tile and also past the drip edge of the roof, see figure 5.4-2. Ground rods shall be installed into undisturbed soil. In urban areas, it may not always be practical to install the ground rods outside of the building. In this case, the ground rods should be installed as close to the building's walls as practical without damaging the footing.

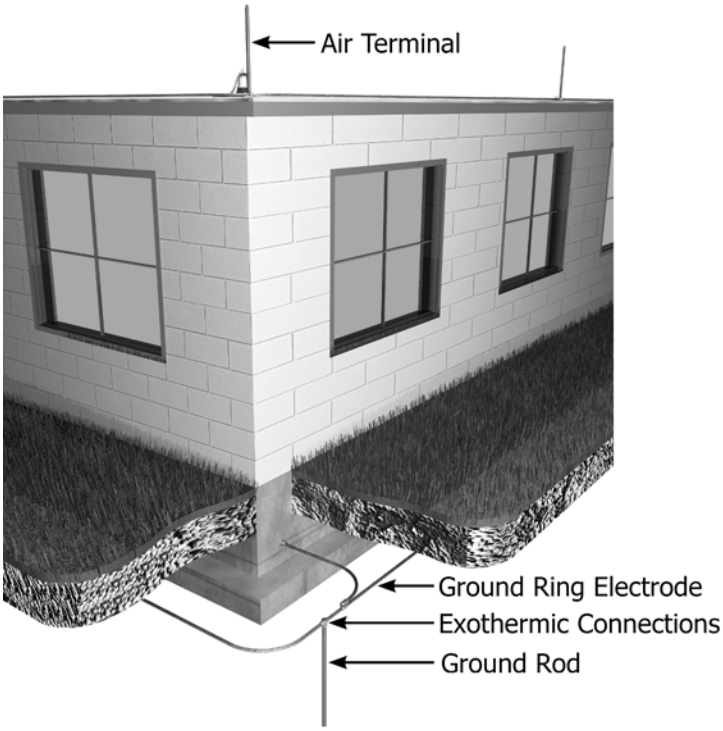

Figure 5.4-2 Clearance from foundation

When driving ground rods into hard, dense soils, the correct ground rod driver adapter should be used to avoid mushrooming or damaging the end of the ground rod. If the damage is too severe, the top of the rod may need to be cut off so that the ground rod clamp or exothermic weld connection can be properly made. Contaminants such as dirt, mud and water shall be cleaned from the contact area prior to making the connection.

5.4.3 Ground Ring Electrodes

A ground ring is required by both NFPA 780 and LPI 175 for structures 60 feet or taller. If required, a ground ring electrode for the lightning protection system shall be installed at least 450 mm (18 in.) below the earth unless ground conditions prevent this. The electrode could be installed at a depth greater than 450 mm (18 in.). There may be confusion as to whether the ground ring electrode is for the lightning protection system ground or for a supplemental electrical ground. If the ground ring electrode is being installed for the purposes of electrical grounding, it shall be installed to a depth of at least 750 mm (30 in.). Ground ring electrodes shall be continuous around the structure and connect to all down conductors. The ground ring electrodes, rods, and other installed electrodes permitted by the standard(s) shall be installed so that it is not affected by freezing-thawing cycles of the earth, (if present). See figure 5.4-3

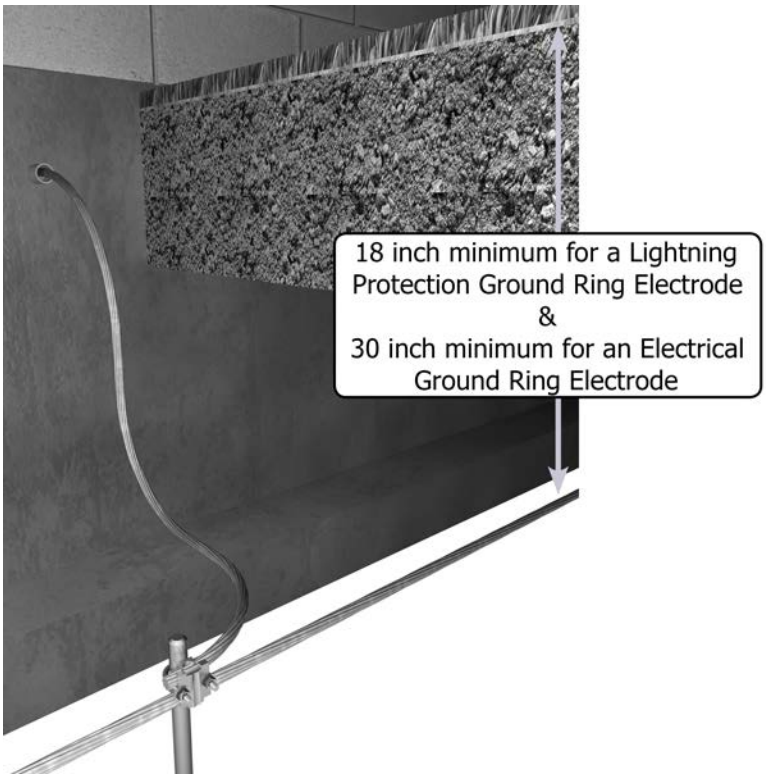

Figure 5.4-3 Installation below frost line

5.4.4 Common Bonding. In accordance with NFPA 780, all grounding systems and underground metal piping systems that enter a building shall be bonded to the lightning protection system within 3.7 m (12 ft) of grade level, see figure 5.4.4-1.

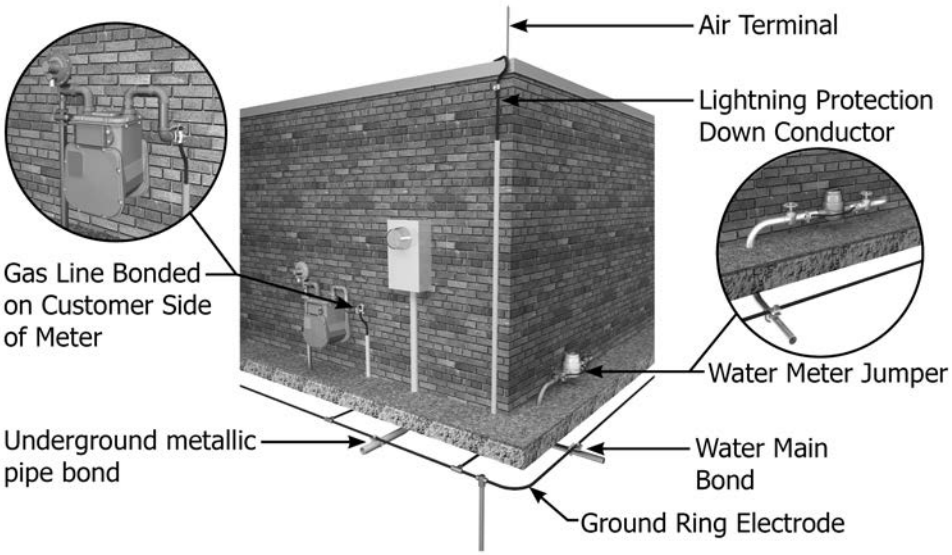

Figure 5.4.4-1 Bonding electrical service and other metal parts

Examples of other grounding systems include but are not limited to the electric service, communications, cable television and antenna system. The use of an intersystem bonding termination device, see figure 5.4.4-2 or a master ground bar may help facilitate these connections. Examples of metallic piping systems include but are not limited to water pipes containing domestic or potable water, fire protection service, landscape or reclaimed water systems, metallic sanitary, kitchen or garbage waste systems, metallic process piping and metallic natural or LP gas services.

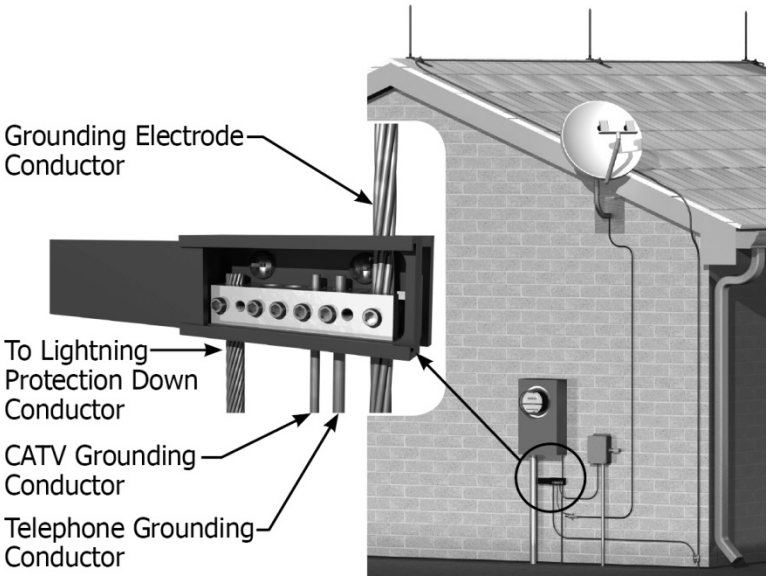

Figure 5.4.4-2 Intersystem bonding termination device

For buildings that exceed 18 m (60 ft) in height, these bonding connections shall be made to a ground loop conductor. A ground loop conductor should be located near grade level if practical. In urban environments, it may not be practical to install the ground loop conductor outside the structure, it is acceptable to place the ground loop conductor in the structure's basement as long as it is within 3.7 (12 ft) of grade level. A ground ring conductor can serve as a ground loop conductor, see figure 5.4.4-3

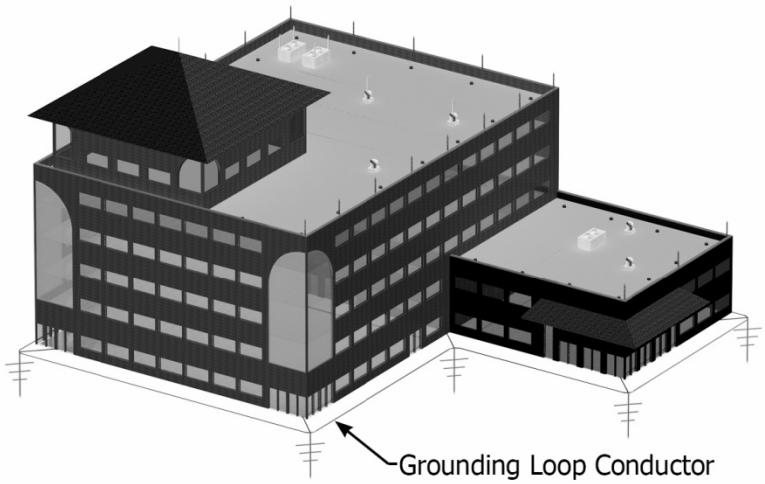

Figure 5.4.4-3 Ground loop (ring) conductor

Section 250.60 of the National Electrical Code (NEC) provides a restriction from using components of a lightning protection system as grounding electrodes for electrical power systems. NFPA 780 does provide an allowance for a ground ring electrode to serve simultaneously as a lightning protection ground loop and an electrode for the power system. This is a correlation issue between the NEC and NFPA 780. The requirement to bond the two systems together must be adhered to as required in NEC Section 250.106. This rule specifies that the grounding electrode system of the lightning protection system be bonded to the electrical service grounding electrode system but does not specify a size of the conductor that must be installed to bond the two systems together. Sizing requirements for lightning protection system conductors are provided in NFPA 780.

5.5 Down Conductors and Bonding

5.5.1 Down Conductors

When installing down conductors for lightning protection systems, it is important to ensure that the paths for the down conductors are clear of obstructions, such as HVAC ducts, large pipes or structural columns or beams. Unlike electrical conductors, lightning conductors cannot be routed up and down over obstructions. Down conductors must maintain horizontal or downward paths from the air terminals to the grounding electrodes. Down conductors shall be securely fastened to the structure at a maximum of 900 mm (3 ft) intervals utilizing listed straps or fasteners. See figure 5.5.1-1

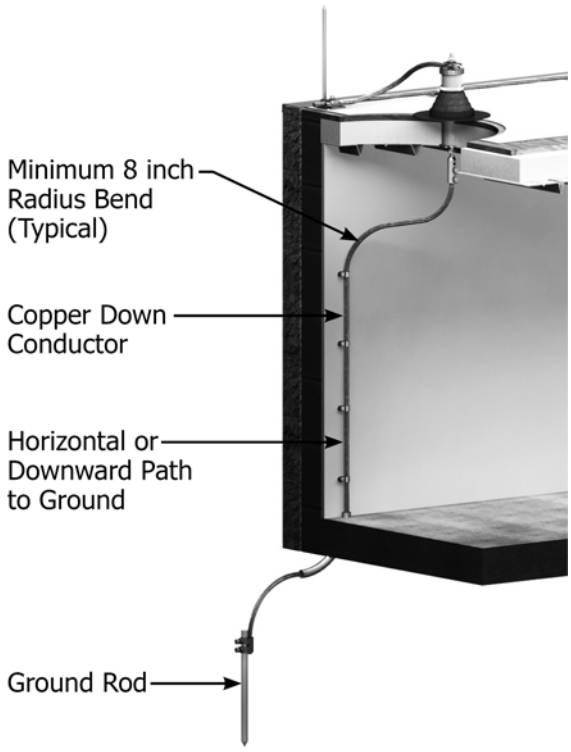

Figure 5.5.1-1 Down conductor installation maintain horizontal downward path

Down conductors for the lightning protection system shall be spaced as widely as practicable around the outer perimeter of the building, see figure 5.5.1-2. Running down conductors in chases interior to the building should be avoided unless required by the lightning protection system design. Down conductors should not be located in or close to electrical, computer, communications, or other rooms or areas containing sensitive electronic equipment.

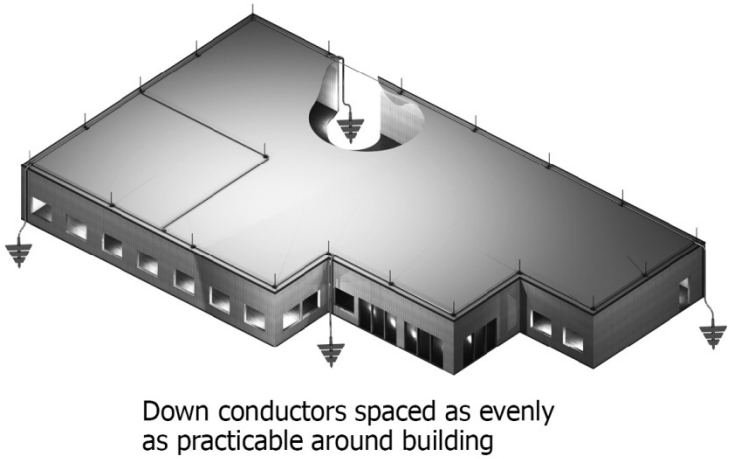

Figure 5.5.1-2 Down conductors shall be widely and evenly spaced

Sharp bends and splices in down conductors should be avoided and kept to a minimum. Bends and splices increase the impedance of the conductor. If many splices are expected in down conductors, it is good practice to use exothermic connections instead of mechanical clamp splices. See figure 5.5.1-3

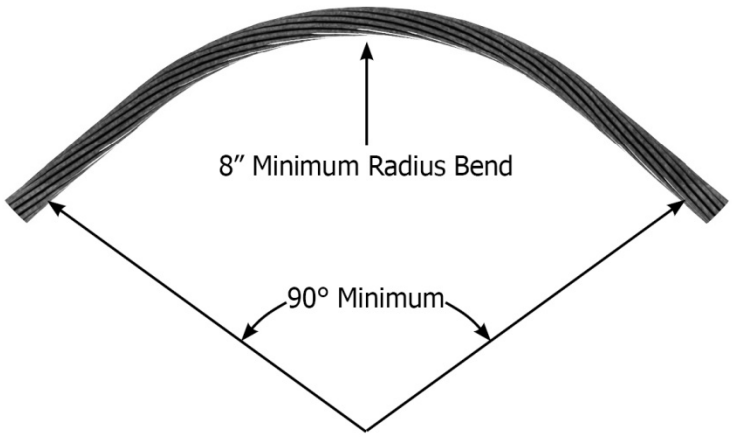

Figure 5.5.1-3 Bends must maintain minimum radius

Down conductors shall be securely fastened to the structure at maximum 900 mm (3 ft) intervals. It is good practice to add additional fasteners at bends in the conductors because of the large mechanical forces that occur when conducting lightning currents. The conductor clips and hardware must be the same material as the conductor or a material equally resistant to corrosion. This requires copper or aluminum clips with stainless steel fasteners. UL 96 provides specific listing requirements for straps and fasteners. Galvanized or cad plated steel fasteners are not acceptable, see figure 5.5.1-4. For PVC conduit use either stainless steel or PVC straps.

When routing down conductors through exterior walls, a thru-wall device should be used to prevent moisture from entering the structure. Moisture and water intrusion through walls and floors warrants additional directions and cautions, similar to that offered for roofs.

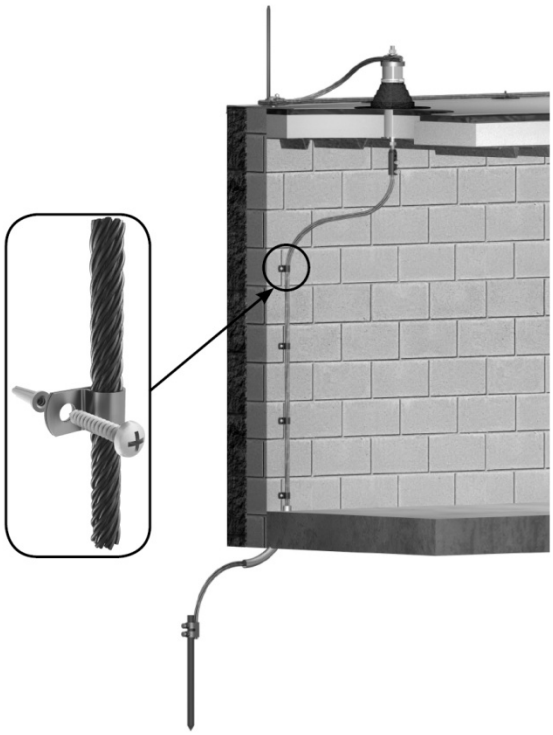

Figure 5.5.1-4 Use appropriate straps made of copper or aluminum with stainless steel fasteners

Exposed down conductors in areas subject to physical damage shall be protected with guards or conduits at least 1.8 m (6 ft) above grade level. If metal conduits or guards are used, conduits shall be bonded to the contained conductor at each ends, see figure 5.5.1-5

Figure 5.5.1-5 Protect down conductors from physical damage as required

When down conductors are installed in long vertical conduits or raceways, the down conductors should be supported to reduce strain that would be placed on conductors. Based on NEC equivalent conductor sizing, Class I copper conductors should be supported every 30 m (100 ft) and Class II copper conductors should be supported every 25 m (80 ft). Metallic conduits shall be bonded directly to the conductor where it enters and exits the conduit. Conduits should be secured to the building at maximum intervals required based on the size and type of conduit as required by the NEC. Bends in the conduits should be kept to a minimum. Standard conduit elbows do not meet the 200 mm (8 in.) radius bend requirement. Sizes ¾" diameter or smaller standard conduit elbows do not meet the 200 mm (8 in.) radius bend requirement. For long vertical raceways, it is recommended to start at the top to facilitate the ease of installation. Schedule 80 PVC provides protection against physical damage and shall be secured and support in accordance with the requirements in Chapter 3 of the NEC.

If the building has an electrically continuous structural metal framework, the structural metal may be used as down conductors. Utilizing the structural metal framework as down conductors reduces the amount of bonding connections required, simplifies and reduces the amount of materials needed for the installation, see figure 5.5.1-6.

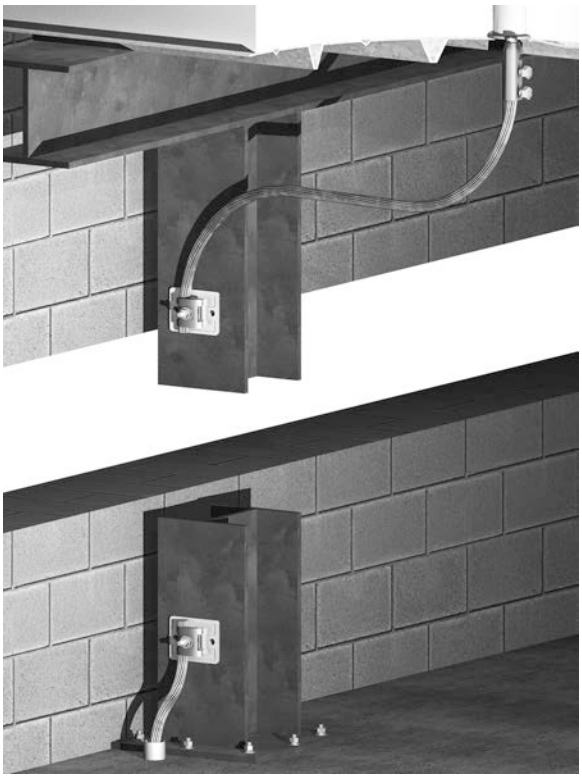

Figure 5.5.1-6 Building frame used as down conductor

When using the structural metal framework as a down conductor the metal shall be cleaned in the area of the connection down to base metal, removing all paint, rust, and mill scale to avoid high resistance connections. When utilizing mechanical connections, antioxidant joint compound should be used to prevent corrosion, see figure 5.5.1-7. When using the exothermic welding process, the steel surface shall be cleaned to base metal to aid in producing a good connection.

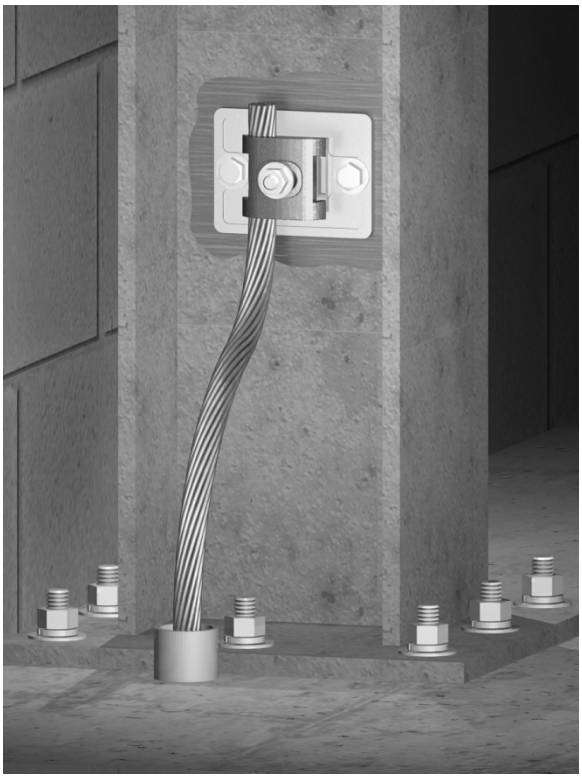

Figure 5.5.1-7 Clean metal surfaces and use antioxidant at connections

The control of fire and smoke is a major concern in building codes. Routing down conductors in both new and existing construction may require reestablishing the integrity of fire-rated walls, floors, and ceilings. Although there are national codes that have requirements, in most cases, actual requirements are up to the local code authority having jurisdiction.

It is important to note that connections in down conductors that will not be exposed to view after installation should be photo documented.

5.5.2 Bonding

Where down conductors are run on buildings with structural metal framework, the framework shall be bonded to each down conductor near the bottom and the top of the down conductor, see figure 5.5.2-1

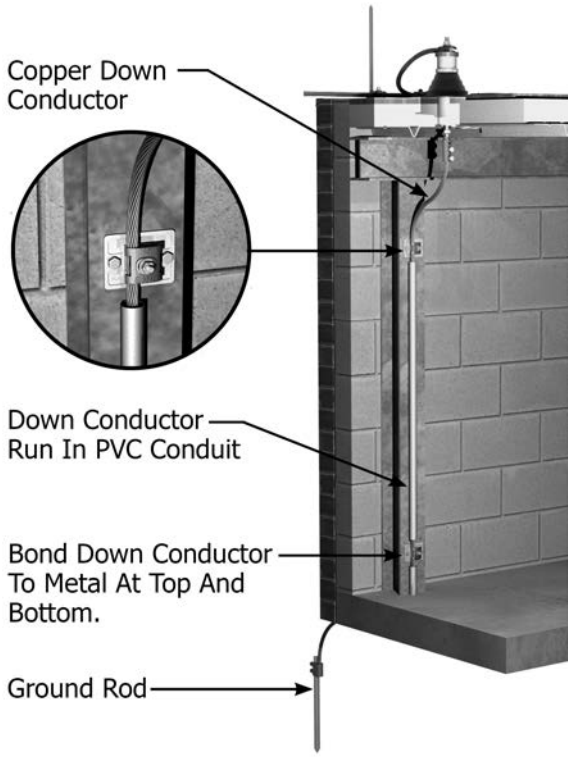

Figure 5.5.2-1 Bond metal framing close to point of entry and exit

In the same way, if the building has steel reinforced concrete columns or concrete masonry unit (CMU) walls with reinforcing steel, the rebar shall be bonded at the bottom and top of the down conductors, see figure 5.5.2-2

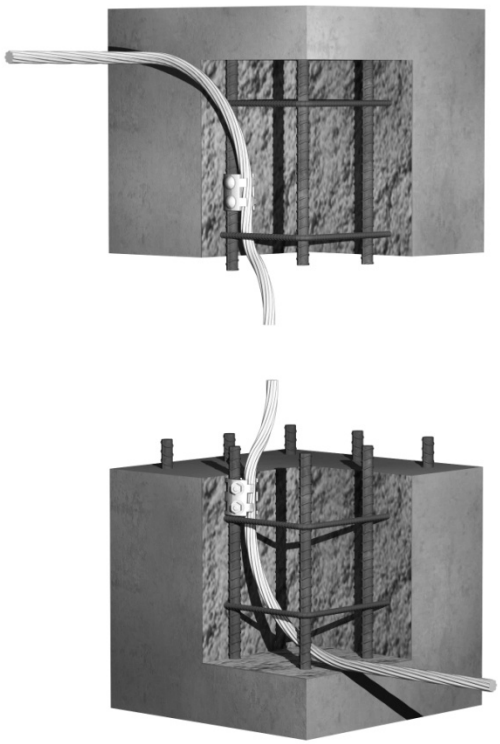

Figure 5.5.2-2 Bond rebar in columns at bottom and top points of entry

When the structure is taller than 60 m (200 ft), additional connections to the structural metal columns or vertical rebar are required so that the distance between bonds along the down conductor does not exceed 60 m (200 ft).

Other grounded metal objects near down conductors may require bonding if they are located within the calculated “side-flash” or bonding distance. It is permitted to move the down conductors away from these grounded metal objects to avoid making the bonding connections if the required bonding distance can be exceeded, see figure 5.5.2-3

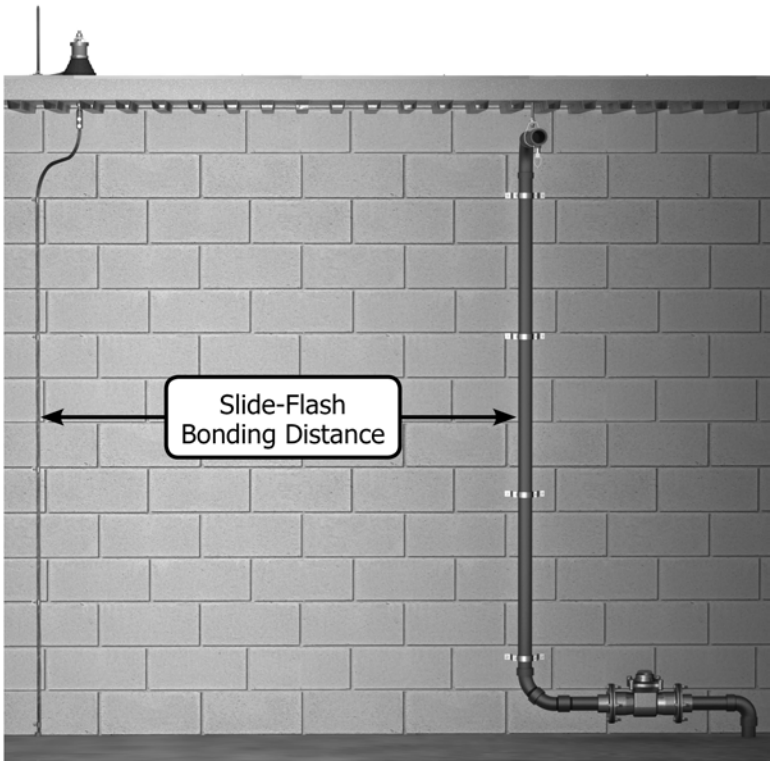

Figure 5.5.2-3 Maintain minimum side flash distances or bond

5.5.3 Concrete Structures

When a concrete structure is taller than 60 m (200 ft), additional mid-loop connections to the structural metal columns or vertical rebar and for bonding other metal parts, are required so that the distance between bonds along the down conductor does not exceed 60 m (200 ft).

5.6 Thru-Roof Installation

Installation of the thru-roof connectors should be carefully reviewed with the roofing contractor, roofing manufacturer, architect and engineer prior to installation. Roof penetration details will vary with the type of roofing system and the roofing system manufacturer. In some instances, the roofing contractor may prefer that thru-roof connector assemblies be installed prior to installation of the roofing and in other instances after.

Thru-roof connector assemblies are designed to accommodate various ranges of roof thickness. The assembly should be sized taking into consideration thickness of the roof deck, insulation and roofing materials as applicable. Note that thickness of a roof may vary at different locations around the roof due to sloping for drainage. The thru-roof assemblies should be modified at the site so that they extend not more than 225 mm (9 in.) above the completed roof. This will allow the conductor to rise up from the roof within 900 mm (3 ft) without having to provide additional support, see figure 5.6-1

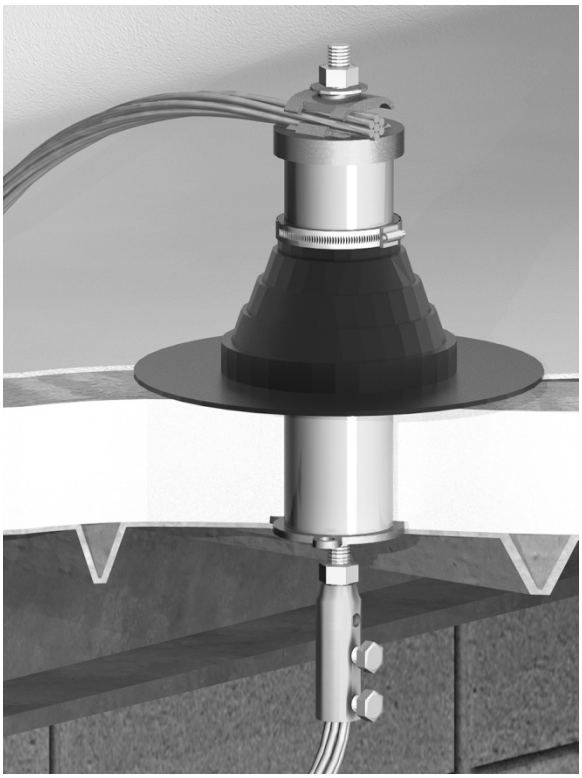

Figure 5.6-1 Connection at through-roof penetrations to be made within 225 mm (9 in.) of roof

Installing thru-roof connectors in low areas of flat or gently sloping roofs should be avoided, particularly near roof drains. Similarly, when penetrating corrugated metal roofing systems, the penetration should be made on the high part of the corrugation.

Thru-roof connectors should not be installed too close to parapet walls or other roof penetrations so that the roofing contractor has room to install roof flashing properly around the penetrations.

On pitched roofs, thru-roof connectors should not be located in valleys or near gutters where there is the most water flow on the roof. Particular care should be exercised to not penetrate flashing in valleys

5.7 Roof Top Installation

5.7.1 Location and Mounting of Air Terminal Bases

Generally the air terminal bases are the first lightning protection components to be installed on the roof. Having the air terminal bases secured will make installation of the roof conductors much easier. It is a good practice to not install the air terminals on the bases until after most of the work is complete on the roof for safety reasons, see Figure 5.7.1-1

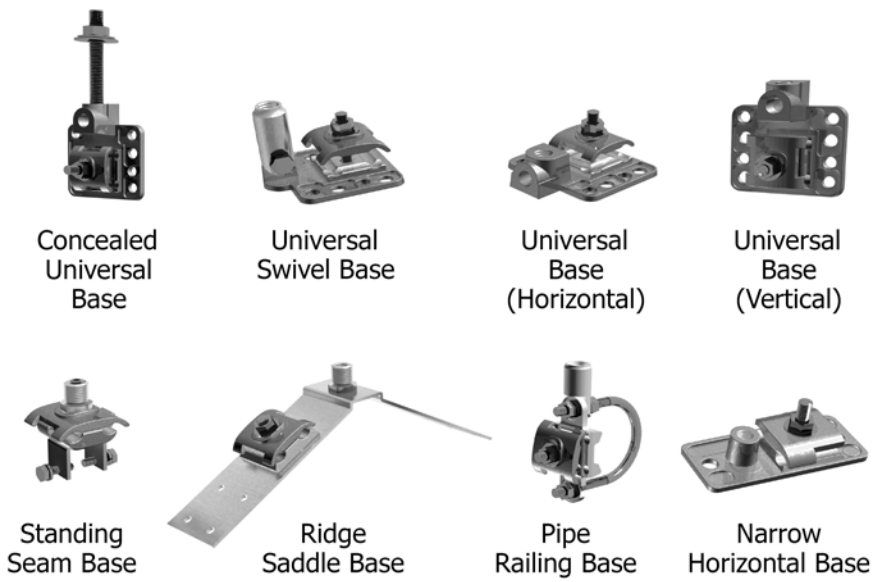

Figure 5.7.1-1 Air strike terminal mounting and connection means

The layout of air terminal bases typically starts at a corner of a flat roof or the end of a ridge for a pitched roof. The shop drawing will show the number of air terminals along the edge or ridge. The length of the edge or ridgeline is divided into equal sections so that the air terminals are equally spaced, see figure 5.7.1-2

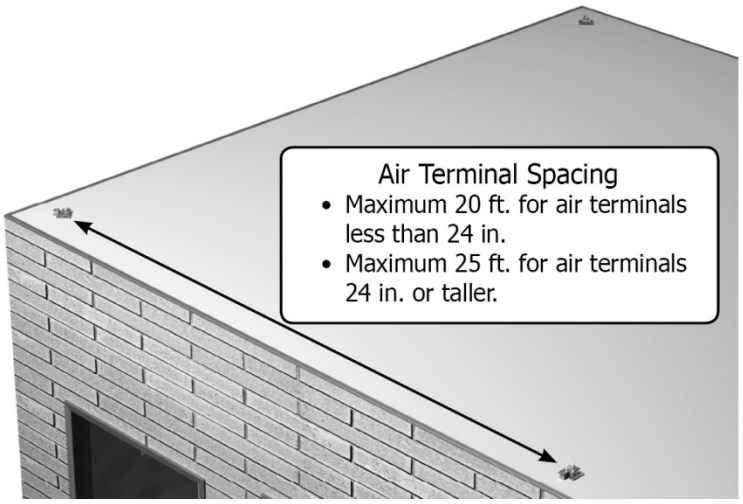

Figure 5.7.1-2 Air terminal spacing

When mounting bases near corners and edges, be careful to maintain at least a minimum 200 mm (8 in.) radius bend when running the conductors, see figure 5.7.1-3

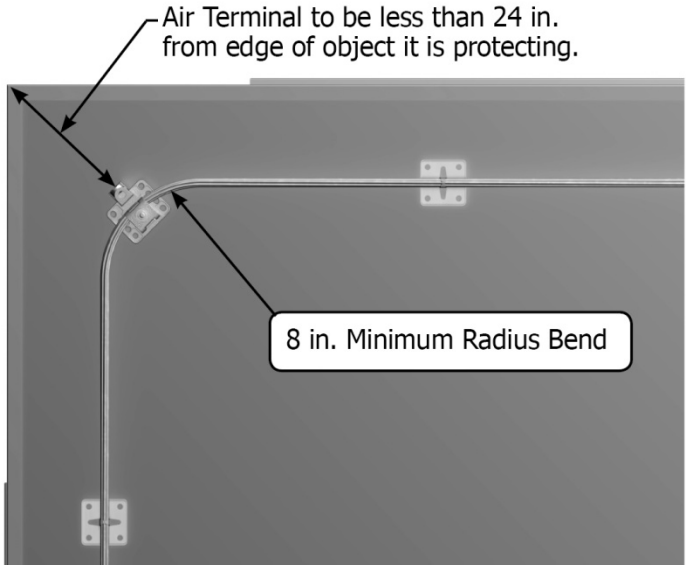

Figure 5.7.1-3 Air strike terminals within 600 mm (24 in.) of building edge

When mounting air terminal bases on roof-top equipment it is important to make sure that access panels are not obstructed. Fasteners are to be installed so that they do not damage components on the interior of the unit, see figure 5.7.1-4.

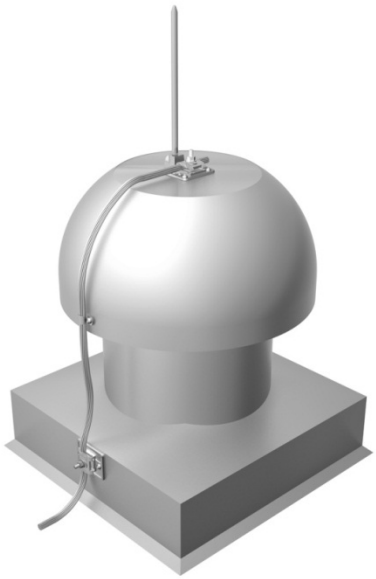

Figure 5.7.1-4 Use care when fastening airstrike terminals on equipment with internal components

Air terminal bases must be securely attached to the structure. As with conductor fasteners, the hardware must be corrosion resistant and is typically copper, aluminum, or stainless steel. The type of fastener must be compatible with the fitting and mounting surface.

In the event that adhesives are not viable, stainless steel screws are recommended for fastening to metal surfaces. Self-drilling and tapping screws with a screw gun work well in various metal thicknesses. When

using a screw gun, the torque should be properly set to avoid stripping the hole. When mounting to thinner metals or where there is little clearance behind the metal surface, pan head sheet metal screws are recommended. Again, it is important not to over torque the screw.

Stainless steel drive pins or stainless steel concrete and masonry screw are recommended for concrete or masonry surfaces. The hardware must have a minimum outside diameter of 6 mm (1/4 in.). When attaching to masonry surfaces the hardware shall be fastened in the masonry unit, not in the mortar joint. The hardware shall not within two anchor lengths of the edge of the masonry unit to prevent cracking or spalling.

When attaching to wood surfaces, stainless steel screws however brass or bronze screws may be used with copper or bronze air terminal bases and aluminum screws with aluminum bases.

On standing seam metal roofs when penetration of the roof is not desired, compatible standing seam bases or mounting clips may be used. Alternatively, adhesives may be used as indicated below. Adhering to metal roofing will require bonding to the roofing seams at a minimum of each down lead.

When penetration of the roof membrane is not permitted, adhesives may be used to attach the air terminal bases. It is critical that the roofing contractor and manufacturer be consulted prior to using adhesives on the roof. They must make sure the adhesive is compatible with their roofing system. Many roofing manufacturers have specific details for mounting lightning protection equipment to their roofing systems. Attaching air terminal bases to very flexible roof membranes will require extra support in the form of additional pads or supports. Using incompatible adhesives or mounting details will void the roofing installation and product warranties.

5.7.2 Routing of Roof Conductors

Although the shop drawings will give the general routing of conductors on the roof, it is helpful to plan ahead. By planning ahead, you can minimize bonding objects on the roof by maintaining the appropriate separation distance. The number of splices and connectors may also be minimized with some forethought.

Conductors must be routed to avoid sharp bends of less than 90 degrees or radius of bend less than 8 inches. This is particularly a concern at edges and corners where direction of the conductor can change abruptly.

Conductors should be securely attached to the structure, in the same manner as air terminal bases. Conductors must be attached at maximum 3 feet intervals and good practice may dictate closer intervals in areas where movement of the conductor is of a concern, see figure 5.7.2-1.

When running lightning protection conductors in conduit the conduit supporting rules in NFPA 70 (NEC) Chapter 3 shall apply.

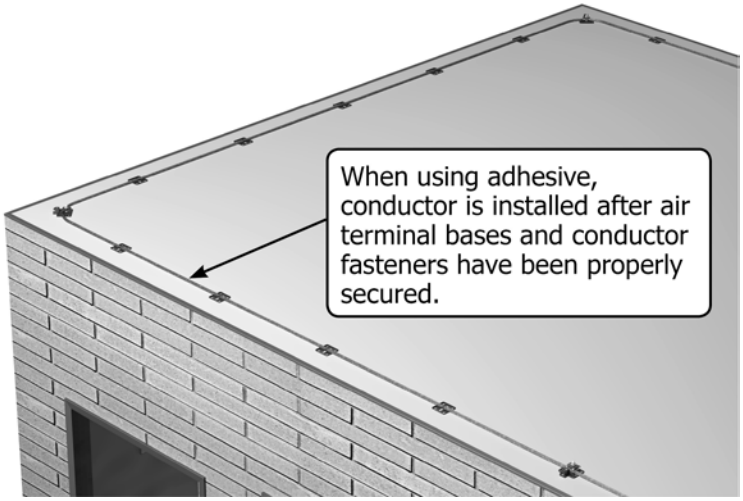

Figure 5.7.2-1 Properly secure conductors in using a method suitable for the construction

In cases where the conductor must run through the air for more than 900 mm (3 ft), it shall be run in or on conduit, strut or other rigid support that is rigidly attached to the structure.

Avoid routing conductor perpendicular to the slope of pitched roofs where ice, snow or debris can collect on the conductor.

Care should be exercised when routing conductors to account for temperature extremes. Copper and aluminum conductors expand and contract at different rates than do the many different types of roofing system. Conductors that are installed very tight on sunny, hot days can pull the fasteners off the roof on cold winter days, see figure 5.7.2-2.

When routing roof conductors through walls, a thru-wall device should be used to prevent moisture from entering the structure. See figure 5.7.2-3

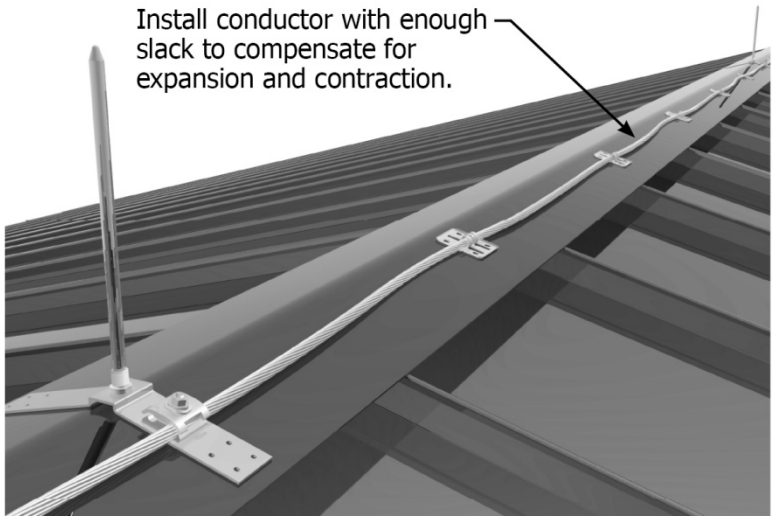

Figure 5.7.2-2 Leaving enough slack in conductors

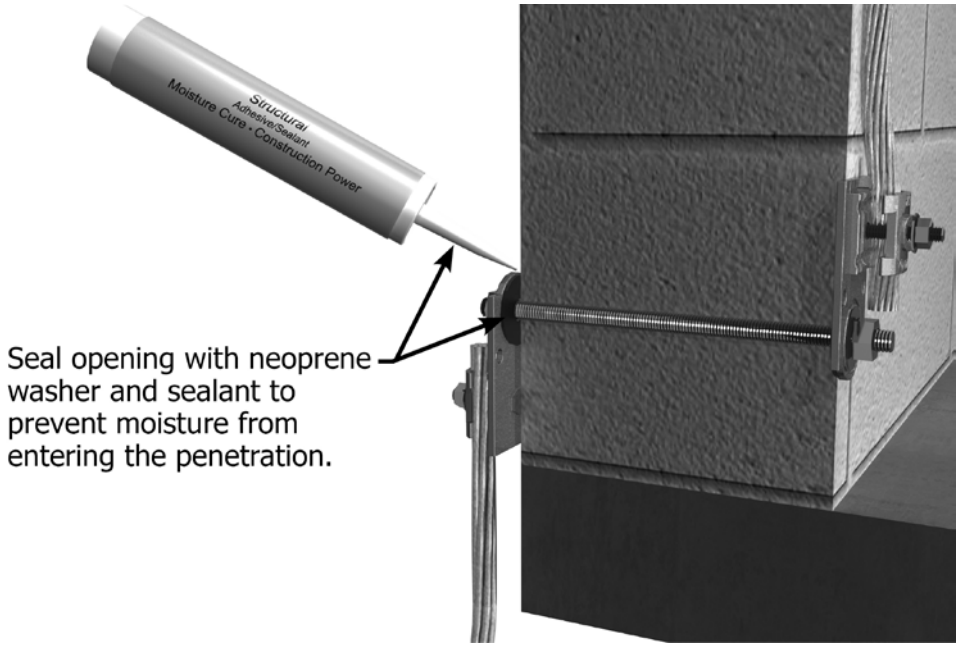

Figure 5.7.2-3 Through-wall connections using threaded rod

5.8 Surge Protective Devices (SPDs)

Line surges can occur for a number of reasons or causes. Among these are direct lightning strikes to incoming lines, or strikes in close proximity to the building that will cause a rise in potential on the incoming lines. This includes the electrical service lines and any limited energy lines such as telephone systems, antenna systems, or broadband communications systems. Other means may need to be taken for protecting internal electrical and electronic systems from against lightning electromagnetic pulses.

Potential equalization can be achieved at electrical service by bonding to down conductors and ground loop conductors as required, installing suitable listed surge protective devices and separation by space or distance.

All lightning protection systems require protection against incoming surges by installation of a surge protective device (SPD). The surge protective device(s) shall be installed at the service entrance equipment for the building or structure. The degree of surge protection is related to the size of the equipment and system being protected. Four different types of surge protection are defined in Section 2 of this publication. Surge arresters are often installed for protecting equipment in medium and high voltage systems. Surge arresters for lightning events are also installed in pole top applications.

5.9 Performance and Quality Control

5.9.1 Product Certification. Materials used in the installation of a lightning protection system must be listed or labeled for use in lightning protection systems. The product certification or listing shall be by a qualified electrical testing laboratory. Organizations such as Underwriters Laboratories, (UL) and the Canadian Standards Association, (CSA) can be found on OSHA's web site which contains a list of Nationally Recognized Testing Laboratories. Although a component may have a listing mark and be listed for the purpose of electrical work, it may not be listed for use in a lightning protection installation. Examples are split-bolt connectors, compression lugs, and "acorn style" ground rod clamps that may be used in electrical work, but are not listed for use in lightning protection systems. Other examples include conduit clips and fasteners. Galvanized steel conduit clips must not be used to fasten lightning conductor cables. Galvanized or cad plated fasteners must not be used. Copper, bronze, aluminum or stainless steel fasteners must be used in lightning protection systems.

5.9.2 Corrosive Influences. Lightning protection system materials must be compatible with the surfaces to which they are mounted. Materials that are outside a building and exposed to the atmosphere are subject to corrosion or may cause corrosion. This is particularly more pronounced in coastal areas where there may be salt in the air. Copper materials that are mounted to aluminum or galvanized steel surfaces quickly corrode those metals and cause staining and deterioration. Aluminum materials that are mounted on copper surfaces will be corroded by the copper surfaces they are mounted on. Confirm the compatibility of materials when making bonding connections to metal objects. Bimetallic connectors may be required.

5.9.3 Conductive Surfaces. When making bonding connections to metal objects remove all paint and other nonconductive coatings from the area of connection, this ensures a good, low resistance connection. Nonconductive coatings protect the metal from corrosion. If corrosion develops under the connection, the connection will become a high resistance connection and will eventually loosen. It is good practice to seal the outside of the connection with a compatible sealant to exclude moisture and air. <u>Any corrosion protection removed to make an electrical connection shall be repaired equivalent to the original corrosion protection.</u>

5.9.4 Adhesives. Compatibility of adhesives is a very important performance issue for two important reasons. The adhesive needs to be compatible with the surface where it is applied to ensure that the adhesive will not destroy the roof membrane or other surface. If the adhesive destroys the roof surface, it may cause leaks in the roof membrane, this can be a very serious repair issue. The second reason compatibility is important is to make sure that the adhesive functions properly and the system components are held in place.

5.9.5 Cleaning and Temperature. In addition to compatibility with the mounting surface, it is equally important the surface be properly prepared for the adhesive. This is particularly true in the case of

existing buildings where dust, dirt and oils can build up on the exterior surfaces of the building. The adhesive may appear to set up, but may never actually bond to the mounting surface. Adhesives also have temperature ranges for application or may be affected by the presence of moisture or other environmental considerations. All these factors need to be considered when using adhesives to secure lightning protection materials.

5.9.6 Fasteners. When using screws and other mechanical fasteners, it is important that they are appropriate for the materials to be fastened. Care must be exercised when using self-drilling and tapping screws in thin metals, as it is very easy to over torque the screw and strip the metal. In some instances it may be more desirable to utilize finer thread sheet metal screws or bolts, nuts and washers. As indicated above, this hardware must be compatible with the materials and be as resistant to corrosion as the lightning protection conductors and materials.

5.9.7 Exothermic Connections. When making exothermic connections, all parts of the connection must be cleaned and free of moisture before making the connection. Dirt and moisture or oils may cause voids in the connections and cause the mold to crack or explode.

5.9.8 Mechanical and Compression Connections. Mechanical and compression splices and connections shall be listed for the purpose and installed in accordance with the manufacturer's installation instructions. Compression connections shall be made using the appropriate tools and dies. Mechanical connections shall be torqued in accordance with manufacturer's requirements.

6 Conformity Assessment

6.1 General This section provides information about lightning protection system conformity to applicable design and installation standards. Information about obtaining inspection certificates from Underwriters Laboratories Master Label Certificate program and the Lightning Protection Institute's Inspection Program are provided in Sections 6.2 and 6.3.

6.2 Lightning Protection Institute The Lightning Protection Institute (LPI) is a nationwide not-for-profit organization founded in 1955 to promote lightning protection education, awareness and safety. LPI membership is comprised of manufacturers, contractors, scientists, architects, engineers and safety directors – all interested in promoting lightning safety and improving the science of lightning protection. LPI members are dedicated to ensuring that today's lightning protection systems provide the best possible quality in both materials and installation practices for maximum safety.

LPI has developed two standards related to installation and inspection of lightning protection systems. LPI 175 titled Standard of Practice for the Design – Installation – Inspection of Lightning Protection Systems is based on the design requirements of NFPA 780 and revised every three years according to the standards cycle. Information is added to LPI 175 to assist with the installation process from member experience. The publication LPI 177 is titled Inspection Guide for Certified Systems and is keyed to the paragraphs of the 175 document with additional information for those involved in system inspection and certification.

The LPI individual certification is designed to educate and examine lightning protection professionals using a program which meets the national safety standards (LPI 175 Standard, NFPA 780 Standard, and UL 96 & 96A Standards). Through a battery of exams, the LPI certification program assures participants are thoroughly tested in proper installation techniques and certified competent to provide quality workmanship and supervise complete system installation. Testing for those involved in the manufacture or installation of systems includes credentials as Journeyman Installer (JI), Master Installer (MI) and Master Installer Designer (MID). Professionals, not directly involved in system application, are credentialed as Designer Inspectors.

The Lightning Protection Institute Inspection Program (LPI-IP) provides third party NRTL inspection of completed system installations. LPI-IP certifies systems to the requirements of specified standards NFPA 780, UL 96A, and/or LPI 175. LPI-IP issues a Master Installation Certificate, Reconditioned Master Installation Certificate, or Limited Scope Inspection Report appropriate for the project scope.

6.2.1 LPI-IP Certificates and Inspections

The Lightning Protection Institute Inspection Program (LPI-IP) system certification provides independent third party evidence that a lightning protection system design and installation ~~was~~ have been found to be in complete compliance with specified inspection standards. The system installation is witnessed at two critical stages, the grounding stage and after completion of the roof-top lightning protection system. An LPI certified Master Installer is required to make these reviews. Photographs of work concealed below grade or within the building construction are required for submittal with the application for inspection. An as-built drawing showing the full system design is approved by a LPI-IP professional engineer certified as an LPI Master Installer Designer for each project. Field inspection of the final exposed system elements is completed by a third party NRTL on site.

The LPI-IP **Master Installation Certificate** is the most common system certification covering an entire independent structure. An independent structure includes any and all parts of a structure that are interconnected by common walls, firewalls, walkways or are otherwise contiguous. LPI-IP **Reconditioned Master Installation Certificate** is available for systems brought up into the current requirements of the standards. The reconditioned certificate requires the original system to have been certified by a LPI-IP Master Installation Certificate or UL Master Label, and that no changes have been made to the previously certified building footprint. A **Limited Scope Inspection Report** is issued by LPI-IP on projects treating specific areas or parts of structures not including the full building. Limited scope might include equipment only additions to protected structures, reroofing projects where concealed system elements are not verified by previous certificates, or small additions limited by project scope.

The LPI Master Installer responsible for the project submits the appropriate application, as-built drawing, and digital photographs to LPI-IP. The approved drawing is stamped, and a final third-party inspection is coordinated with the contractor. Upon passing field inspection, a certificate is sent electronically to the contractor for distribution, and retained by LPI-IP for future reference. All LPI-IP certifications have an expiration date of 3 years from their date of issue. LPI-IP contacts the contractor at the end of 3 years to remind them of expiration of the certification.

6.3 Acquisition of UL Master Label® Certificate

Underwriters Laboratories has a certification program for lightning protections systems. This program is commonly referred to as the Master Label program. A Master Label® Certificate indicates to the building owner that the lightning protection system installed meets the requirements of an installation standard. For the purposes of this standard, it means that the system is in compliance with NFPA 780. Certificates identify the name and address of the property where the installed system is located, the name of the installer who requested the certificate, inspection date, certification expiration date and other details pertinent to the system. The certificate is posted on UL's website, where it can be viewed by any interested parties.

A Master Label® Certificate remains valid from the time of inspection until the expiration date unless modifications are made to the structure. Modifications may include alterations or additions to the structure's electrical, mechanical or communication systems. Also, changes to the lightning protection system, the roofing/coping system, or when any new objects are added to the structure that are not in the zone of protection, i.e. security cameras or Wi-Fi antennas, will void the Master Label® Certificate. Additionally, a certificate expires when physical damage or improper maintenance occurs to the lightning protection system. **The Master Label® Certificate expires five years after the inspection date**.

Only a UL-accredited installation organization or company working under the direction of a UL-accredited installation organization can request an inspection. A representative of, or an appointee of a listed firm must be present at the time of the inspection.

6.3.1 Inspection Procedure

The installer is responsible for coordinating access to all portions of the structure necessary to verify compliance with the specified standard. Some of the areas include but are not limited to:

- Main electrical power/distribution room
- Main communications room
- Service utilities such as sewer, water, fire suppression, and so forth

- Rooftop
- Attics
- Basement

The installer is responsible for ensuring that the required areas can be accessed safely. This may include snow removal, removing any trip hazards, disconnecting power, etc.

6.3.2 Submitting Application for Master Label®

Requests for inspections shall be done through the UL secure web page. Submitting an application on line is a declaration that the installation complies with the applicable requirements. The installer shall include on the application the structure's name/identification, location and all other fields listed on the web based application form. All supporting documentation such as as-built drawings, photos of concealed portions of the structure, etc. must be included.

6.3.4 Post UL Inspection Documents

Upon successful completion and inspection of the lightning protection system, the Master Label® Certificate will be issued to the building owner and the installation contractor. It is the installation contractor's responsibility to ensure that the Master Label® certificate is published on a UL public directory where they can be viewed by interested parties such as building owners, architects, insurance agencies, etc.

6.3.5 Letter of Findings

Letter of Findings – Outlines the inspection process of a lightning protection system that has known non-compliances due to construction or limitations or that otherwise renders a system ineligible for a Master Label. One such limitation may be that the project in question is a new addition to an existing facility. A Master Label cannot be issued for the addition unless the original building has a current Master Label lightning protection system. Updating or adding a lightning protection system to the existing structure would be outside of the scope of work for the addition, thus a Letting of Findings is issued. The letter of findings has no expiration date and is not published on UL's web site. It is in the best interest of the building owner to ensure that there is a Master Label lightning protection system for both the existing structure and the new addition.

7.0 Inspection, Maintenance, and Testing Procedures

7.1 Inspection and Maintenance

Installations shall be inspected upon completion. A maintenance manual should be provided to the building owner upon completion of the installation. Minimally, periodic annual inspections are recommended, more frequent inspections may be required based on the following:

Environmental conditions – (i.e. presence of corrosive atmospheres and areas with severe climatic changes including extreme temperature fluctuations)

Classification of the structure or area protected – (i.e. building use such as one containing explosive materials)

Mounting surface for lightning protection components – (I.e. roofing surfaces that may be subject to accelerated corrosion

Lightning protection materials used – (i.e. aluminum materials may be susceptible to accelerated corrosion in certain environments)

In addition to the above requirements, the lightning protection system should be inspected whenever any alterations or repairs have been made to the structure and if any lightning strikes have known to occur. Thorough, in-depth inspections should be conducted every three to five years. Certificates expires three or five years from the date of issue or when specific changes to the structure have occurred, see section 6.

7.1.1 Visual Inspections. Visual inspections are used to determine:

- System is in good operating condition
- No loose connections which might cause system failure
- No components have been compromised due to corrosion or excessive vibration
- No down conductors have been detached, severed or stolen
- Grounding electrodes are still attached
- All conductors, fasteners and other components are securely attached
- No alterations or additions have been made to the structure that would impact the effectiveness of the lightning protection system
- Surge protection devices are still operational
- Lightning protection system is still in compliance with NFPA 780

7.1.2 Testing

Testing should be done to verify that concealed parts of the system are still electrically continuous as well as to determine if any additional equipotential bonding needs to be established for any new services or equipment added since the last inspection.

Ground resistance testing of the individual grounding electrodes should be conducted to determine if there has been any increase in resistance since the original installation. Considerations should be given to the environmental conditions during the testing, periods of heavy rain or freezing can dramatically affect readings. If the readings indicate an abnormal increase in resistance, the cause should be determined. Possible reasons for increases in resistance may be an accidental disconnection of the grounding electrode or extreme corrosive conditions rendering the grounding electrode or conductor ineffective. Please see section 7.2 for methods of testing grounding electrodes.

7.1.3 Inspection Guides and Maintenance Manuals

An inspection guide should be prepared and made accessible to the party responsible for the lightning protection system. This should contain all relevant information needed to make a complete assessment of the system. Minimally, the following data should be covered:

- Overall condition of all lightning protection system components such as air terminals, conductors and fittings
- Presence of any corrosion or material wear
- Presence of any loose components
- Resistance measurements of grounding electrodes
- Presence of any new building components since the last inspection
- Changes made to the system or structure noted on the as-built drawings

Complete records of this data should be recorded in a manual and be made available to the persons responsible for the integrity of the lightning protection system.

7.14 Maintenance Programs

A maintenance program should contain a checklist of all items that need to be inspected and should contain the following:

- Inspection of all conductors, (condition and attachments to the structure)
- Reattach any loose conductors and replace any severely corroded ones
- Inspect all fittings for tightness and corrosion, (re-torque any loose connections and replace any severely corroded ones)
- Test and record ground resistance measurements of all grounding electrodes
- Inspection of all surge protection devices, replace any failed or defective units
- Record any new additions made to the structure

Complete records should be kept of all maintenance procedures and inspections, as they will assist in setting a baseline assessment of the lightning protection system and aid in establishing a preventative maintenance program. See Annex D for sample operations and maintenance manual and procedures.

7.2 Ground Testing Methods

7.2.1 General IEEE Standard 81 describes several different methods in which to test the resistance of a grounding electrode or a grounding electrode system, among those methods are the three-point fall of potential method and the “clamp-on” test. NFPA 780 Annex E describes the principals involved with the three point fall of potential test and how it can be used with small and complex grounding electrode systems. The “Clamp-on” test method is used predominantly to test individual electrodes but it has limitations.

7.2.2 Fall of Potential Method This method requires that the grounding electrode or grounding electrode system be isolated from the electrical power system if the utility uses a multi-grounded neutral system. It must also be isolated from the telecommunications ground as well as any other building grounds. Tests should be performed on individual grounding electrodes and the results recorded over time. Any increase of resistance from the original test reading may indicate deterioration of the grounding electrode. When using grounding electrodes in conjunction with a ground ring, it may not be possible to test the individual electrode. In this case the entire system should be tested while isolating it from other building grounds.

7.2.3 Clamp-On Method The “clamp-on” method requires that the grounding electrode or grounding electrode system be connected to the electrical power system using a multi-grounded neutral system or another zero reference source. Proper placement of the unit is essential in order to obtain a correct reading. The grounding electrodes should be tested individually to determine the resistance value. Any increase of resistance from the previous test reading may indicate deterioration of the grounding electrode.

8.0 Project Management Guidelines

8.1 Project Management. Good project management procedures are essential to the successful design, installation and certification of a lightning protection system. Project management is important for coordination, documentation, and avoiding problems. Project management begins with proper planning which includes defining the scope of the project, determining the best workflow, and having procedures in place to deal with communication, scope changes, quality issues, and documentation.

8.2 Design and Shop Drawings. Project design drawings need to be formalized into complete shop drawings that are coordinated and confirmed by all trade contractors as well as the architect and engineer. This is particularly important for design/build projects where things change quickly and substantially. Approved coordinated shop drawings determine the scope of the project and provide detailed installation methods and procedures. These drawings form the basis for the project documentation.

8.2.1 Specification Review. In addition to NFPA 780, UL96A and LPI 175 requirements, there may be other government, state, or local code requirements. This information is often contained in original bid documents.

8.3 Planning. Determining the best workflow also requires proactive planning. In new construction it is important to stay on top of the project. Lightning protection systems interact with most all other building systems. It is important to anticipate installation of those systems so that required connections can be made. Proactive planning is important so correct materials and adequately qualified installation personnel are in place at the job site.

8.4 As Built Drawings. Accurate documentation of the system installation is critically important to certification. Procedures must be in place to make certain all concealed portions are accurately documented on As Built drawings as well as with dated photos. This documentation facilitates future testing, maintenance and recertification processes.

8.5 Other Related Information. There are lightning protection installers that have been trained to evaluate and apply appropriately designed systems to any building or structure. Electrical contractors often offer this service as part of their contracting business or they may subcontract to organizations that specialize in only lightning protection system installation and certification. For more complete information about lightning protection system installations and the requirements for such systems refer to the Electrical Training Alliance (ETA) *Lightning Protection Systems* training program, NFPA 780 *Standard for the Installation of Lightning Protection System and LPI 175 Standard of Practice for the DESIGN-INSTALLATION-INSPECTION of lightening protection systems*, LPI-177 *Inspection Guide for Certified System.* For information about listed products suitable for use in lightning protection systems refer to UL 96 *Lightning Protection Components*. See Annex A in this textbook for additional information about this type of equipment UL Guide Information for Electrical Equipment in categories (OVETZ) and OWAY).

Annex A Lightning Protection System Specification Example

The Master Format™ published by the Construction Specification Institute™ includes lightning and cathodic protection in Division 2600 titled Electrical. Lightning protection systems and cathodic protection are clearly included as a subset of the electrical discipline as categorized by CSI in the Master Format™ for construction specifications. The following represents a sample specification for lightning protection system installation. This is intended as a model specification and is not intended for use in development of specifications that apply to job specific applications, as each site has different characteristics.

The following provides an example of a specification that could be used and applied to lightning protection system installations and certification processes.

Section 26 41 13 – LIGHTNING PROTECTION SYSTEM SPECIFICATION

Part 1 – GENERAL

1.01 Summary:

a. Provide a complete lightning protection system for the building(s) or structures shown on the contract drawings. The design of this system is to be in strict accordance with this section of the specifications and all contract drawings that apply.

b. The lightning protection system shall be installed by a firm actively engaged in the installation of lightning protection systems. The completed system shall comply with the latest edition of the applicable lightning protection standard such as NFPA® 780, Standard for the Installation of Lightning Protection Systems or LPI-175 Standard of Practice for the DESIGN-INSTALLATION-INSPECTION of lightening protection systems, LPI-177 Inspection Guide for Certified System. The system shall be physically inspected to achieve a Certificate of Inspection for compliance with the applicable standard and evidence of conformance shall be provided to the building owner. A UL Master certificate(s) must be made available for viewing on the UL website, https://lps.ul.com.

c. The work covered under this section of the specification consists of furnishing labor, materials and services required for the completion of a functional and unobtrusive lightning protection system approved by the architect, engineer and in conformance with applicable lightning protection standards such as NFPA 780 or LPI 175.

1.02 Standard(s):

The completed lightning protection system shall comply with the latest issue of NFPA® 780, Standard for the Installation of Lightning Protection Systems or LPI-175 Standard of Practice for the DESIGN-INSTALLATION-INSPECTION of lightening protection systems, LPI-177 Inspection Guide for Certified System which form a part of this standard.

1.03 Submittals:

a. Product Data: Submit manufacturer's descriptive and technical literature and catalog cuts.

b. Shop drawings: Submit installation shop drawings shall be submitted to the architect and engineer for coordination with other trades and approval prior to start of the installation. Shop drawings are to show the extent of the system layout designed specifically for the building(s) or structures included in the contract drawings along with installation details of the products to be used in the installation.

1.04 Quality Assurance:

The installing contractor shall apply for inspection certificate of the completed lightning protection. Certificate programs recognized by this standard are UL Master Certificate Program and Lightning Protection Institute (LPI) Inspection Certificate and Labeling Program. Each of these program includes specific criteria that must be met in order to achieve conformance certification of the system. For compliance to the UL Master Label Certificate Program, the system is to be inspected by Underwriters Laboratories Inc., or other ANSI certified testing agency for compliance with NFPA® 780. The system shall be without deviation and the UL field representative will issue a UL Master Label® Certificate of Inspection for Lightning Protection Systems or Letter of Findings at completion of the installation, as indicated in section 3.04 below. For compliance to the Lightning Protection Institute (LPI) Inspection Certificate and Labeling Program the system must meet national safety standards (LPI 175 Standard, NFPA 780 Standard, and UL 96 & 96A Standards). Through a battery of exams, the LPI certification program assures participants are thoroughly tested in proper installation techniques and certified competent to provide quality workmanship and supervise complete system installation. See Section 6 for more detailed information.

1.05 Pre-Construction Conference:

Before beginning a lightning protection system installation, the installing contractor should meet with the building owner and all other trades and affected parties to coordinate the sequence of events for the entire project. All safety concerns and requirements must be addressed as well as coordination for access to areas within an existing building that would be required. Project timelines, material delivery and storage, and other related project installation activities should be reviewed and understood by all involved. Any unforeseen circumstances or problems should be addressed by subsequent project coordination meetings as necessary.

Part 2 – PRODUCTS

2.01 Materials:

All materials used in the installation shall be new and shall comply in weight, size and composition as required NFPA® 780, Standard for the Installation of Lightning Protection Systems or LPI-175 Standard of Practice for the DESIGN-INSTALLATION-INSPECTION of lightening protection systems and shall be labeled or listed (certified) for use in lightning protection systems. The system furnished under this specification shall be the standard product of a manufacturer regularly engaged in the production of lightning protection equipment. The manufacturer shall be listed as a manufacturer of lightning protection components by the applicable qualified electrical testing laboratory.

2.02 Material Requirements:

a. Class I materials shall be used on structures or portions of structures that do not exceed 75 feet in height above grade level. Class II materials shall be used on structures that exceed 75 feet in height above grade.

b. Copper materials shall not be mounted on aluminum, Galvalume®, galvanized steel or zinc surfaces. This includes those materials that have been painted.

a. Aluminum materials shall not come into contact with earth or where rapid deterioration is possible. Aluminum materials shall not come into contact with copper surfaces or where exposed to runoff from copper surfaces. Aluminum materials shall not be attached to surfaces covered with alkaline-based paint, embedded in concrete or masonry, or installed in a location subject to excessive moisture.

Part 3 – EXECUTION

3.01 Installation

a. The installation of the lightning protection system shall be done in a neat and workmanlike manner.

b. The lightning protection system shall be installed by or under the supervision of an accredited lightning protection installer.

c. The installers shall have completed factory training and be so certified by the manufacturer.

d. Install the lightning protection system in accordance with the approved coordinated shop drawing and the referenced lightning protection system installation standards.

3.02 Coordination

a. Coordinate the installation of the lightning protection system with other trades.

b. Coordinate all roof penetrations, fasteners and adhesive with the roofing contractor prior to installing any materials on the roof.

3.03 Project Documentation

a. Photo document all concealed portions of the lightning protection system as they are being installed. This includes lightning protection system grounding electrodes, connections to structural metal, connections to underground metal piping entering the structure, connections to electrical and electronic service grounds, ground rings, etc. This documentation should be authenticated by the owner or other designated representative.

b. Maintain accurate "as-built" drawings throughout the entire installation of the lightning protection system.

3.04 Inspection, Certification and Maintenance

a. At completion of the installation of the lightning protection system, the contractor shall apply for inspection of the system by UL field representatives. The system is to be inspected for compliance with NFPA® 780.

b. If the lightning protection system covers an entire independent structure and the system passes inspection, UL will issue a Master Label® Certificate of Inspection for Lightning Protection System. The contractor will submit the certificate for distribution to the premises' owner. For the certificate to be valid, the contractor must publish the certificate to the UL website, https://lps.ul.com where it may be viewed by consumers, building owners, insurance agencies and other interested parties. The Master Label® Certificate of Inspection is valid for a period of five years. If the building changes structurally or if modifications are made to the system during that period, the certificate is no longer valid.

c. If the scope of the lightning protection system is limited by contractual or other reasons, the installer may limit the scope of the UL inspection. In those cases where the entire system is not inspected, a Master Label® Certificate of Inspection will not be issued by UL. They will issue a Letter of Findings of their inspection indicating compliance with the limited scope of the inspection.

d. At project closeout, the contractor shall provide the owner with accurate as-built drawings as well as recommended guidelines for maintenance of the system.

3.05Air Terminals

a. Air terminals shall extend a minimum of 250 mm (10 in.) above the object or area they are to protect. Air terminals shall be located at intervals not exceeding 6.0 m (20 ft) along ridges of pitched roofs and along the perimeter of flat or gently sloping roofs (flat or gently sloping roofs include roofs that have a pitch less than 75 mm (3 in.) or less rise per 300 mm (12 in.). Flat or gently sloping roofs exceeding 15 m (50 ft) in width shall be provided with additional air terminals located at intervals not exceeding 15 m (50 ft). Air terminals shall be located within two feet of the ends of ridges, roof edges and outside corners of protected areas.

b. Air terminals shall be installed on stacks, flues, mechanical units and other objects not located within a zone of protection. Permanent metal objects on the structure having an exposed metal thickness 4.8 mm (3/16 in.) or greater may be substituted for air terminals and shall connected to the lightning protection system as required by the specified standards using main size conductor and bonding plates having a minimum of 75 mm^2 (3 $in.^2$) of surface contact area.

c. Air terminal bases shall be securely fastened to the structure in accordance with the specified standards. Fasteners may include stainless steel screws, bolts, nails, anchors or adhesive. Adhesive shall be compatible with the surface on which it is used. Any protective sheets or pads that may be required by the roofing manufacturer shall be furnished and installed by the roofing contractor.

d. Main conductors shall be sized as Class I or Class II materials in accordance with the specified standards. Conductors shall provide a two way, horizontal or downward path from each strike or air terminal to connections to the lightning protection ground electrode system. Conductors shall be free of excessive splices and no bend of a conductor shall form an included angle of less than 90 degrees, nor have a radius of bend less than 8 inches.

e. Conductors shall be securely fastened to the structure on which they are placed at intervals not exceeding 900 mm (3 ft). Fasteners shall be of the same material or of a material equally resistant to corrosion as that of the conductor. Any protective sheets or pads that may be required by the roofing manufacturer shall be furnished and installed by the roofing contractor.

f. Connector fittings shall be listed for the purpose and of the same material as the conductor or of electrolytically compatible materials.

g. Down conductors shall be sized as Class I or Class II materials in accordance with the specified standards. Class II conductors from a higher portion of a structure shall continue to connections to the lightning protection ground electrode system. Down conductors shall be spaced at intervals averaging not more than 30 m (100 ft) around the perimeter of the structure. In no case shall a structure have fewer than two down conductors. Where down conductors are installed exposed on the exterior of a structure and are subject to physical damage or displacement, guards shall be used to protect the conductor a minimum of 1.8 m (6 ft) above grade. Metallic guards shall be bonded at each end.

h. In case of structural steel frame construction, down conductors may be omitted and roof conductors shall be connected to the structural steel frame at intervals not exceeding 30 m (100 ft) along the perimeter of the structure.

3.06 Roof Penetrations

Roof penetrations required for down conductors or for connection to structural steel framework shall be made using thru-roof assemblies with solid riser bars or conduits and

appropriate roof flashing. Conductors shall not pass directly through the roof. The roofing contractor shall furnish and install the materials required to properly seal all roof penetrations of the lightning protection components and any additional roofing materials or preparations required by the roofing manufacturer for lightning conductor runs to assure compatibility with the warranty for the roof including roof pads that may be required to protect the roof under each of the lightning protection components.

3.07 Ground Electrodes:

a. Each down conductor shall terminate at a ground electrode dedicated to the lightning protection system, or to a building or facility ground electrode system that consists of multiple ground electrodes that are interconnected with a ground ring conductor.

b. Ground rod electrodes shall be copper-clad steel, a minimum 16 mm (5/8 in.) diameter and 3.0 m (10 ft) long. The down conductor shall be connected to the ground electrode using a bronze ground rod clamp having a minimum of 38 mm (1½ in.) contact between the ground rod electrode and the conductor measured parallel to the axis of the ground rod electrode, or by an exothermically welded connection. Ground rod electrodes shall be located a minimum of 600 mm (2 ft) below grade and shall be installed below the frost line where possible (excluding shallow topsoil conditions).

c. Where it is not possible to drive ground rod electrodes because of bedrock or shallow topsoil conditions, ground plate electrodes, radial electrodes, ground ring electrodes, concrete-encased electrodes, or combinations of these may be used in accordance with NFPA® 780.

d. Where the structural steel framework is utilized as down conductors for the system, ground electrodes shall be connected to columns around the perimeter of the structure at intervals averaging not more than 18 m (60 ft) apart. Columns shall be grounded using either bonding plates having 8 square inches of surface contact area or by exothermically welded connections. The base of each steel column shall be connected to the lightning protection ground system.

3.08 Common Bonding of Grounded Systems

a. Common bonding of all grounded systems within the building shall be ensured by interconnecting them to the lightning protection system using main size conductor and fittings.

b. For structures exceeding 18 m (60 ft) in height, the interconnection of the lightning protection system ground electrodes and other grounded systems shall be in the form of a ground loop conductor.

c. These grounded systems shall include but are not limited to the electrical service, communication, and antenna system grounds as well as all underground metallic piping systems including water, gas, sewer, underground metallic conduits, etc. Interconnection to a gas line shall be made on the customer’s side of the meter.

3.09 Potential Equalization

a. Grounded metal bodies located within the required bonding distance as determined by the bonding distance formula in NFPA® 780 shall be bonded to the lightning protection system using the required bonding conductors and connections.

3.10 Surge Protection Devices

a. Surge protection devices (SPDs) shall be provided at all power service entrances and at entrances of conductive signal, data and communication services.

b. AC SPDs shall be listed and labeled as compliant with UL 1449, and shall have a nominal discharge current (I_n) rating of at least 20 kA 8/20 µs per phase.

c. SPD's shall be listed for the protection of conductive signal, data, and communication services shall have a maximum discharge current (I_{max}) rating of at least 10 kA 8/20 µs when installed at the entrance.

Annex B Pre-Installation Walk Thru and Checklist

The shop drawing must be compared to current architectural, structural and mechanical, electrical, plumbing and fire protection drawings for this project to confirm that the design of this system is in compliance with the specified lightning protection system installation standards.

Note: If estimates and shop drawing for this project were prepared with limited information (list here), much of the below will need to be confirmed at the project site.

Project:		Date:	
Address:		Project No.:	
Location:			
Contractor:		Office:	
Address:		Fax:	
Location:		Cell Phone:	
Contact:		Email:	

Down Conductors, Grounding & Bonding

- ☐ Confirm materials used are listed for use in lightning protection systems. No electrical lugs or clamps

- ☐ Confirm that aluminum materials are not to used in the ground (or within 450 mm (18 in.) of ground) or imbedded in concrete

- ☐ Building perimeter of _____ feet requires _____ down conductors. Confirm quantity of down conductors meets requirements of standards.

- ☐ Confirm proposed locations will allow down conductors and ground rod terminals to be installed.

- ☐ Confirm soil conditions are such that the 3.0 m (10 ft) long ground rods can be driven vertically into the earth

- ☐ Confirm routing of ground loop conductor.

- ☐ Determine locations of electric service grounds, communications and antenna systems grounds as well as all metallic piping and duct systems that enter the building.

    - Electric Service Ground
    - Telephone/communications Service
    - Cable Television Service

- Domestic Water Supply
- Fire Protection Water Supply
- Natural Gas Service
- Sanitary Waste Piping
- Storm Drainage Piping
- Landscape Water Piping

☐ Confirm location and routing of metallic structural framing systems in building and determine the required bonding connections tat the top and bottom of each down conductor.

☐ Confirm locations of mechanical or other equipment mounted on the ground near the building

☐ Confirm locations of any metal fences that attach to or are near the building

☐ Confirm roof penetrations for down conductors are proper type and size for roof construction and will not extend more than 225 mm (9 in.) above roof.

☐ Confirm roofing contractor is aware of the penetrations and will provide the appropriate flashing and counter-flashing of roof penetrations.

☐ Confirm that ground electrode installation and all concealed portions of the system will be photo documented by the contractor, preferably with a time date stamp. This includes all components and conductors that will be concealed from view in the future such as: down conductors, structural bonds, bonds to metal piping, etc. It is also to the contractors benefit to photo document the entire system as this will show additions and changes to the system that may occur during construction

Air Terminals and conductors at the roofs

☐ Confirm that materials are compatible with the surface on which they are to be mounted

☐ Confirm that proper bimetallic connectors are to be used to connect copper to aluminum conductors or materials

☐ Confirm locations of air terminals and conductors on roofs.

☐ Confirm locations and quantities of mechanical equipment and other objects that extend above the roof.

- ☐ Confirm and document zone of protection areas and calculations

- ☐ Confirm that mounting and fastening methods are compatible:

  - Masonry anchors (drive pins) in bricks or blocks, not in mortar
  - Adhesive fasteners should not be used on vertical surfaces
  - Screws do not penetrate waterproof membrane where leaks are a concern

- ☐ Confirm with roofing contractor the need for pads on roof for mounting materials

- ☐ Confirm with roofing contractor compatibility of adhesive/sealants used on roof

- ☐ Confirm air terminals extend a minimum of 250 mm (10 in.) above the area they protect

- ☐ Confirm air terminals are to be within 600 mm (2 ft) of all edges and outside corners of roofs, chimneys, mechanical units, etc.

- ☐ Confirm spacing of air terminals at the perimeters of roofs and rooftop objects does not exceed 6.0 m (20 ft) to meet requirements in applicable mandatory standards.

- ☐ Confirm spacing of air terminals in the central areas of roofs not exceed 15 m (50 ft) from perimeter air terminals, air terminals on rooftop equipment, or other center roof air terminals

- ☐ Confirm air terminals are provided with two paths to ground that maintain horizontal or downward coursing from air terminals to ground electrodes

- ☐ Review exception that where necessary, allows conductors to be run in such a manner that they may rise vertically at a rate of rise of 75 mm (3 in.) or less rise per 300 mm (12 in.) of horizontal run.

- ☐ Confirm that bends in conductors should be minimized but must have a radius of bend that is 8 inches or greater and that the angle of a bend must not be less than 90 degrees.

- ☐ Confirm requirements that prohibit “U” or “V” pockets in conductor runs.

- ☐ Confirm that all conductors are to be securely fastened to the structure at maximum 3 feet intervals

- ☐ Confirm the requirements for bonding of grounded metal bodies near the main lightning conductors

Surge Protection Devices (SPDs)

- ☐ Confirm surge protection devices on electrical service(s) are compliant with the current edition of UL 1449, with 20KA I_n

Notes/Comments/Others in attendance

	Owner Representative		Contractor Representative
Signatures:			
Print Name:			
Date:			

Annex C Post-Installation Inspection and Checklist

This inspection will determine if the system installation is ready for final conformance assessment and certificate inspection. The latest revision of the shop drawing or customer provided "AS-BUILT" drawing will be used for this inspection to confirm that the installation of this system is in compliance with the specified lightning protection system installation standards.

Project:		Date:	
Address:		Project No.:	
Location:			
Contractor:		Office:	
Address:		Fax:	
Location:		Cell Phone:	
Contact:		Email:	

Down Conductors, Grounding & Bonding

- ☐ Confirm all materials used are listed for use in lightning protection systems. No electrical lugs or clamps
- ☐ Confirm that aluminum materials are not used in the ground (or within 18 inches of ground) or imbedded in concrete
- ☐ Confirm that all required down conductors are installed.
- ☐ Confirm that all required ground electrodes are installed and verified with dated photo documentation
- ☐ Confirm routing of ground loop conductor if installed.
- ☐ Confirm that required equipotential bonding connections to electric service grounds, communications and antenna systems grounds as well as all metallic piping and duct systems that enter the building have been made and verified with photo documentation:
    - Electric Service Ground
    - Telephone/communications Service
    - Cable Television Service
    - Domestic Water Supply
    - Fire Protection Water Supply

- Natural Gas Service
- Sanitary Waste Piping
- Storm Drainage Piping
- Landscape Water Piping

☐ Confirm required bonding and photo documentation of metallic structural framing systems at each down conductor location.

☐ Confirm required bonding of mechanical or other equipment mounted on the ground near the building.

☐ Confirm bonding of any metal fences that attach to or are near the building

☐ Confirm all thru-roof penetrations for down conductors are located where required and are properly connected and verified with dated photo documentation.

☐ Confirm that thru-roof assemblies are no more than 225 mm (9 in.) above the roof.

Air Terminals and conductors at the roofs

☐ Confirm that materials are compatible with the surface on which they are to be mounted.

☐ Confirm that proper bimetallic connectors are to be used to connect copper to aluminum conductors or materials.

☐ Confirm locations of air terminals and conductors on roofs match the shop drawing and requirements of installation standards.

☐ Confirm that all air terminals extend a minimum of 250 mm (10 in.) above the area they protect.

☐ Confirm air terminals are within 600 mm (2 ft) of all edges and outside corners of roofs, chimneys, mechanical units, etc.

☐ Confirm spacing of air terminals at the perimeters of roofs and rooftop objects does not exceed 6 m (20 ft) meeting requirements in applicable mandatory standards.

- ☐ Confirm spacing of air terminals in the central areas of roofs does not exceed 15 m (50 ft) from perimeter air terminals, air terminals on rooftop equipment, or other center roof air terminals unless the roof area is in a zone of protection indicated on the shop drawing.

- ☐ Confirm air terminals are provided with two paths to ground that maintain horizontal or downward coursing from air terminals to ground electrodes.

- ☐ Confirm that the required equipotential bonding connection to the electric service grounds, communications and antenna systems grounds as well as all metallic piping and duct systems that enter the building have been made utilizing listed connections and terminations and verify with photo documentation.

- ☐ Confirm that all mechanical equipment and other objects that extend above the roof are shown on the shop drawing and have been addressed in the system design to determine that no additional items have been added to the roof.

- ☐ Confirm that roof conductors have been located as shown on the drawing and where required by installation standards.

- ☐ Inspect bends in conductors to confirm they have a radius of bend that is 200 mm (8 in.) or greater and that the angle of a bend is not be less than 90 degrees.

- ☐ Confirm that there are no “U” or “V” pockets in conductor runs.

- ☐ Where there are areas where conductors are installed in such a manner that they rise vertically, ensure that the rate of rise is 75 mm (3 in.) or less rise per 300 mm (12 in.) of horizontal run.

- ☐ Confirm that all conductors are to be securely fastened to the structure at maximum 900 mm (3 ft) intervals.

- ☐ Confirm that mounting and fastening methods meet requirements::

    - Masonry anchors (drive pins) in bricks or blocks, not in mortar
    - Adhesive fasteners should not be used on vertical surfaces
    - Screws do not penetrate waterproof membrane where leaks are a concern

- ☐ Confirm that all grounded metal bodies within the calculated bonding distance of the main lightning conductors have been properly bonded. Confirm that connections are tight and secure and that there are no issues with dissimilar metals that may accelerate corrosion.

Surge Protection Devices (SPDs)

- ☐ Confirm surge protection devices have been installed on electrical service(s) and are compliant with UL 1449, 3rd Edition with 20KA I_n

Notes/Comments/Others in attendance

	Owner Representative		Contractor Representative
Signatures:			
Print Name:			
Date:			

Annex D Sample Operation and Maintenance Manual

Project Name [ ]

City, State [ ]

Lightning Protection System

Operations, Inspections and Maintenance Manual

Materials By [ ]

Manufacturer/Supplier [ ]

Installation By [Company Name, Address Phone]

Operation of a Lightning Protection System

There are no lights, horns, or other indicators to verify that a lightning protection system is in proper working order and ready to receive a lightning strike. When a strike does occur, the system must function properly or severe damage to the structure may result.

A lightning protection system that has been designed and installed in conformance with nationally recognized lightning protection installation standards can be expected to operate as intended to provide protection against lightning strikes to the protected structure. Continued operation of this system is assured as long as the system is properly maintained and as long as there are no changes to the protected structure that renders the system inadequate.

An inspection and maintenance program is important to assure that the lightning protection system is in good working order should a lightning strike occur to the protected structure.

Inspection of Lightning Protection Systems

Frequency of Inspection

Lightning protection systems are typically inspected and certified for compliance with lightning protection system installation standards at the time they are first installed. In addition to the initial inspection, is very

important to make continuing periodic inspections of these systems to ensure proper operation. The interval between inspections should be determined by such factors as:

(a.) Hazard level of structure, contents, or area protected.

(b.) Degree of lightning protection afforded by the system.

(c.) Exposure to local environment; corrosive atmospheres, extreme weather conditions.

(d.) Type of materials used in the components of the system.

(e.) Types of materials to which the lightning protection components are attached.

(f.) Trouble reports or complaints.

In addition to the above, a lightning protection system should be inspected whenever any alterations or repairs are made to a protected structure, as well as following any known lightning discharge to the system.

Lightning protection systems should be visually inspected every year at a minimum. In regions where severe weather changes occur, it may be advisable to visually inspect systems more often or following extreme changes in temperatures. Extreme changes in temperature cause expansion and contraction of the system components, which can loosen connections. Complete detailed inspections and testing of systems should be completed every three to five years. Systems that protect high value, hazardous, or critical facilities should be inspected every one to three years depending on the frequency of thunderstorms.

In regions that experience extreme seasonal changes in temperature and rainfall, the timing of inspections should be staggered so that earth resistance measurements, for example, are made in the hot, dry months as well as the cool, wet months. Such staggering of inspections and testing is important in assessing the effectiveness of the lightning protection system during the various seasons throughout the year.

Visual inspections are made to confirm:

(a.) The system is in good condition overall.

(b.) All connections are tight and cables are not loose in connectors.

(c.) The system components are not corroded or damaged by vibration or moving ice and snow.

(d.) Down conductors and ground terminals are connected and not severed by ground movement from freeze/thaw cycles or by landscape/maintenance operations.

(e.) All conductors and system components remain securely fastened to their mounting surfaces and are protected from mechanical damage or displacement.

(f.) There have not been additions or alterations to the protected structure that would require additional protection.

(g.) There is no indication of damage to Surge Protection Devices.

(h.) The system complies in all respects with current editions of lightning protection system installation standards.

Complete Testing and Inspection

Complete inspection and testing includes the visual inspections described above as well as the following:

(a.) Continuity tests to confirm electrical continuity of concealed parts of the system.

(b.) Ground resistance tests of the ground electrode system if possible. Often, it is difficult or impractical to disconnect the lightning protection system from other ground electrode systems in order to conduct an accurate test. At a minimum, individual lightning protection system ground electrodes should be tested and verified that they are connected to the other lightning protection system grounding electrodes. These test results should be compared with previous test results. If the test values differ substantially from previous values, the reason for the difference should be determined.

(c.) Continuity tests should be made to confirm equipotential bonding has been made for any new services or metal objects that have been added to the structure since the last inspection.

Inspection Guides and Records

Inspection guides or forms should be created so that inspections are consistent and test data can be recorded. These guides should contain enough information to guide inspectors so that they document all areas of importance relating to the methods of installation, the type and condition of system components, test methods, and the proper recording of the test data obtained.

Records and Test Data

The inspector should compile and maintain records pertaining to the following:

(a.) General condition of air terminals, conductors, and other connectors and fittings.

(b.) General condition of corrosion-protection measures.

(c.) Security of attachment of conductors and components.

(d.) Ground resistance test measurements of the ground electrodes/system.

(e.) Deviations from the requirements lightning protection installation standards and this guide.

Maintenance of Lightning Protection Systems

General

Lightning protection system maintenance is very important. The requirements of design and installation standards include provisions to provide corrosion protection and increase the size of components to make them more robust. Many system components tend to lose their effectiveness over time due to corrosion factors, weather-related damage, and/or stroke damage. The physical, as well as the electrical,

characteristics of the lightning protection system must be maintained in order to maintain compliance with requirements of installation standards.

Maintenance Procedures

Periodic maintenance programs should be put in place for all lightning protection systems. The frequency of maintenance procedures depends on:

(a.) Weather-related or corrosion damage

(b.) Frequency of lightning strikes

(c.) Protection level

(d.) Exposure to stroke damage

Lightning protection system maintenance procedures should be established and become part of the overall maintenance program for the structure.

A maintenance program should contain a list of items that can serve both as a checklist, and establish a definite maintenance procedure that can be followed regularly. It is the redundancy of these procedures that enhance the effectiveness of a good maintenance program. A good maintenance program should contain provisions for the following:

(a) Visual inspection of all conductors and components.

(b) Verify tightness (torque values) of all air terminals, bases, thru-roof assemblies, bonding lugs and plates, pipe clamps, connectors and conductor fasteners and cable holders

(c) Continuity tests of the lightning protection system.

(d) Ground resistance measurements of the ground electrodes/system.

(e) Inspection and/or testing of surge protection devices to confirm they are in good working order.

(f) Confirmation that the effectiveness of the lightning protection system has not been compromised due to additions or renovations to the structure.

Maintenance Records

Complete records should be kept of all system maintenance. These records provide a means for evaluating system components and their installation and serve as a basis for reviewing maintenance procedures as well as updating preventive maintenance programs.

Annex E Reference Standards

This publication, when used in conjunction with NFPA 780 Standard for Installing Lightning Protection Systems, LPI-175 Standard of Practice for the Design-Installation-Inspection of Lightning Protection Systems, LPI-177 Inspection Guide for Certified Systems, the National Electrical Code (NEC), and product manufacturers' literature, provides sufficient information to install and maintain lightning protection systems. The following organizations and publications may also provide useful information:

National Fire Protection Association (NFPA)
1 Batterymarch Park
P.O. Box 9101
Quincy, Massachusetts 02269-9101
Phone: (617) 770-3000
Fax: (617) 770-3500
www.nfpa.org

NFPA 70-2014, *National Electrical Code* (ANSI)

NFPA 780-2014 *Standard for the Installation of Lightning Protection Systems*

Underwriters Laboratories, Inc.
333 Pfingston Rd.
Northbrook, IL 60062-2096
Phone: 847-272-8800
www.ul.com

UL 96 *Lightning Protection Components*, 20xx Edition

UL 96A *Installation Requirements for Lightning Protection Systems*, 20XX Edition

UL Product Specification Guide visit: http://productspec.ul.com/index.php

Lightning Protection Institute
Post Office Box #6336
St. Joseph, MO 64506
800-488-6864
www.lightning.org

LPI-175 Standard of Practice for the DESIGN-INSTALLATION-INSPECTION of lightening protection systems.

LPI-177 Inspection Guide for Certified Systems

Current National Electrical Installation Standards™ (NEIS™) by NECA:

National Electrical Contractors Association
3 Bethesda Metro Center Suite 1100

Bethesda, MD 20814
(301) 215-4504 phone
(301) 215-4500 fax

www.neca-neis.org

OSHA has produced a Lightning Protection Fact Sheet that addresses lightning safety while working outdoors. This important information is available at the following:

https://www.osha.gov/Publications/OSHA3863.pdf