NECA 402

Standard for Installing and Maintaining Motor Control Centers

ANSI Recirculation Canvass Draft
November 2019

Table of Contents

(This Foreword is not a part of the Standard)

Foreword

National Electrical Installation Standards™ (NEIS™) are designed to improve communication among specifiers, purchasers, and suppliers of electrical construction services. They define a minimum baseline of quality and workmanship for installing electrical products and systems. NEIS™ are intended to be referenced in contract documents for electrical construction projects. The following language is recommended:

> Motor control centers shall be installed and maintained in accordance with NECA 402, *Standard for Installing and Maintaining Motor Control Centers* (ANSI).

Use of NEIS™ is voluntary, and the National Electrical Contractors Association (NECA) assumes no obligation or liability to users of this publication. Existence of a Standard shall not preclude any member or non-member of NECA from specifying or using alternate construction methods permitted by applicable regulations.

This publication is intended to comply with the National Electrical Code (NEC). Because they are quality Standards, NEIS may in some instances go beyond the minimum safety requirements of the NEC. It is the responsibility of users of this publication to comply with state and local electrical Codes and Federal and state OSHA safety regulations as well as follow manufacturer installation instructions when installing electrical products and systems.

Suggestions for revisions and improvements to this standard are welcome. They should be addressed to:

NECA Standards & Safety
3 Bethesda Metro Center, Suite 1100
Bethesda, MD 20814
(301) 215-4546
(301) 215-4500 Fax
www.neca-neis.org
neis@necanet.org

To purchase *National Electrical Installation Standards*, contact the NECA Order Desk at (301) 215-4504 tel, (301) 215-4500 fax, or orderdesk@necanet.org. *NEIS* can also be purchased in .pdf download format at www.neca-neis.org/standards.

1. Scope

1.1 Products and Applications Included

This Standard describes the installation and maintenance procedures for low-voltage motor control centers (MCCs) rated 600 VAC or less with a horizontal bus rating of 2,500 amperes or less.

MCCs may be assembled with factory-installed dry-type transformers and panelboards. The testing and maintenance of such dry-type transformers is addressed in NECA 409, *Standard for Installing and Maintaining Dry-Type Transformers* (ANSI). The testing and maintenance of such panelboards is addressed in NECA 407, *Standard for Installing and Maintaining Panelboards* (ANSI).

1.2 Regulatory and Other Requirements

All information in this publication is intended to conform to the National Electrical Code (ANSI/NFPA 70-2020). Installers shall follow the NEC, applicable state and local Codes, manufacturer instructions, and contract documents when installing and maintaining electrical equipment and systems.

Only qualified persons as defined in the NEC familiar with the construction and installation of electrical power distribution and control systems and equipment shall perform the technical work described in this publication. Administrative functions and other tasks shall be performed under the supervision of a qualified person. All work shall be performed in accordance with NFPA 70E, *Standard for Electrical Safety in the Workplace.*

General requirements for installing electrical products and systems are described in NECA 1, *Standard Practices for Good Workmanship in Electrical Construction (ANSI).* Other *NEIS* provide additional guidance for installing particular types of electrical products and systems. A complete list of *NEIS* is provided in Annex A.

1.3 Mandatory Requirements, Permissive Requirements, Quality and Performance Recommendations, Explanatory Material, and Informative Annexes

Mandatory requirements in manufacturer instructions, Codes, or other mandatory Standards that may or may not be adopted into law are those that identify actions that are specifically required or prohibited and are characterized in this Standard by the use of the terms “must” or “must not,” “shall” or “shall not,” or “may not,” or “are not permitted,” or “are required,” or by the use of positive phrasing of mandatory requirements. Examples of mandatory requirements may equally take the form of, “equipment must be protected . . .,” “equipment shall be protected . . .,” or “protect equipment . . .,” with the latter interpreted (understood) as “(it is necessary to) protect equipment . . .”

Permissive requirements of manufacturer instructions, Codes, or other mandatory Standards that may or may not be adopted into law are those that identify actions that are allowed but not required or are normally used to describe options or alternative means and methods and are characterized in this Standard by the use of the terms “may,” or “are permitted,” or “are not required.”

Quality and performance instructions identify actions that are recommended or not recommended to improve the overall quality or performance of the installation and are characterized in this Standard by the use of the terms “should” or “should not.”

Explanatory material, such as references to other Codes, Standards, documents, references to related sections of this Standard, information related to another Code, Standard, or document, and supplemental application and design information and data, is included throughout this Standard to expand the understanding of mandatory requirements, permissive requirements, and quality and performance instructions. Such explanatory material is included for information only and is identified by the use of the term “NOTE,” or by the use of italicized text.

Non-mandatory information and other reference Standards or documents relative to the application and use of materials, equipment, and systems covered by this Standard are provided in informative annexes. Informative annexes are not part of the enforceable requirements of this Standard but are included for information purposes only.

2. Definitions

Adjustable-Speed Drive: A combination of the power converter, motor, and motor-mounted auxiliary devices, such as encoders, tachometers, thermal switches and detectors, air blowers, heaters, and vibration sensors. Adjustable-speed drives provide easily operable means for speed adjustment of the motor within a specified speed range.

Adjustable-Speed Drive System: An interconnected combination of equipment that provides a means of adjusting the speed of a mechanical load coupled to a motor. A drive system typically consists of an adjustable-speed drive and auxiliary electrical apparatus.

Ground-Fault Protection of Equipment: A system intended to provide protection of equipment from damaging line-to-ground fault currents by operating to cause a disconnecting means to open all ungrounded conductors of the faulted circuit. Through the operation of a supply circuit overcurrent device, this protection is provided at current levels less than those required to protect conductors from damage.

High-Impedance Grounded Neutral System: An intentionally grounded system in which a grounding impedance, usually a resistor, limits the ground-fault current to a low value.

Motor Control Center (MCC): An assembly of one or more enclosed sections having a common power bus and principally containing motor control units.

Motor Control Switch or Motor Control Pushbutton: Any switch or device that is normally used to start and stop a motor by making and breaking motor circuit current.

Motor Control Unit: An interconnected combination of equipment that is self-contained, provides a means of starting, stopping, and otherwise controlling one or more motors, and is intended for installing in a motor control center. Motor control units may contain controllers, starters, transformers, relays, fuses, circuit breakers, and capacitors, as necessary for the intended function.

3. Safety Procedures

Before performing cleaning, inspections, testing, maintenance, or repairs, electrically isolate MCCs in accordance with established procedures. Consider all circuits live until they are confirmed by testing to be de-energized and are locked out of operation. Wear appropriate personal protective equipment in accordance with the Arc Flash Hazard level of the equipment. Failure to observe these precautions may result in severe personal injury and/or death.

3.1 General

For MCCs to work properly, they must be handled carefully, and installed, operated, and maintained correctly. Neglecting fundamental installation and maintenance requirements may lead to personal injury and/or death, and damage to electrical equipment or other property.

MCCs may have multiple sources of power, capacitors with stored electric charge, and control circuits from separate sources. Expect hazardous voltages in all interconnecting components and conductors.

Follow manufacturer instructions for electrically isolating MCCs and components. Open all external disconnects or circuit breakers to completely isolate all power sources. Check capacitors for voltage and discharge. Check equipment for voltage to ensure that equipment is electrically safe before performing any cleaning, inspections, maintenance, testing, or repairs.

Do not work on energized conductors or equipment. Do not enter MCC enclosures or compartments when components are energized. Using established safety procedures, guard energized conductors and equipment in close proximity to work.

Consider all ungrounded and grounded metal parts of equipment and devices to be energized at the highest voltage to which they are exposed unless they are de-energized, tested, locked, and red tagged in accordance with OSHA requirements.

3.2 Safe Work Practices

Perform preliminary inspections and tests prior to beginning work to determine existing conditions. Check existing conditions against available record documents.

Visually verify all cable connections to equipment. Confirm that supply and load cables are connected properly. Keep in mind that transposed cables may be connected to different terminals than expected.

Resolve discrepancies between installed conditions and electrical drawings. Have drawings corrected, if required. Provide warning labels on equipment and cables, where necessary, to indicate unexpected and potentially hazardous conditions.

Maintain as much distance as practical from equipment and devices that may arc during operation or handling, but not less than the arc flash protection boundary specified in NFPA 70E.

Use appropriate Personal Protective Equipment (PPE) and established safety procedures when working on or near energized electrical equipment or equipment that has not been de-energized, tested, grounded, and tagged in accordance with NFPA 70E.

Use insulated hand tools when working on or around energized equipment. Use only properly rated tools for the energy present. Maintain tool inventories to ensure that all tools are accounted for prior to energizing equipment.

During normal operation, hazardous voltages are present on control circuits, potential transformers (PTs), current transformers (CTs), digital (status) input, external I/O circuits, and terminal strips. PT and CT secondary circuits are capable of generating lethal voltages and currents with the primary circuits energized. Do not open-circuit current transformer secondary circuits while equipment is energized. Open-circuited CT terminals can develop voltage near the nominal system voltage and are a significant shock hazard. Follow standard safety precautions while performing any installation or service work (such as removing PT fuses and shorting CT secondaries).

3.3 De-energizing Electrical Equipment

Render equipment electrically safe. Follow lockout/tag-out procedures. Disconnect all sources of power before opening any enclosures or compartments. Verify that source circuit breakers and switches are open.

Exercise caution around MCCs with external sources of control power, and MCCs supplied from more than one primary source of power, including MCCs with integral source transfer switches and main-tie-main equipment. Verify that all sources of power are removed before working on such equipment.

Test conductors and equipment for the presence of voltage. Use electrical testing equipment rated for the operating voltage of the system. Test voltage-sensing equipment on a known, energized source immediately before and after testing the equipment to be tested to ensure that voltage-sensing equipment is operating properly.

Apply locks and tags in accordance with NFPA 70E. Leave locks and tags in place until the work is completed and the equipment is ready to be put into service.

Attach grounding leads to the line terminals of the main circuit breaker or main lugs, to the neutral terminal bus bar, if so equipped, and to the grounding terminal of the MCC.

Do not make any modifications to the equipment or operate the system with interlocks or safety barriers removed. Engage lock-bars for compartment doors so equipped to prevent doors from accidentally closing.

Protect against accidental energization of automatic or remotely-controlled equipment by identifying, opening, locking, and tagging starting devices. Remove locks and tags only after work is complete and tested, and all personnel are clear of the area.

Carefully inspect work areas and remove any tools and objects left inside before energizing equipment. Install all devices, doors, and covers before energizing.

4. Delivery, Handling, and Storage

Consult the MCC manufacturer for recommendations for shipping splits prior to ordering. Plan shipping

splits to ensure that large MCCs will fit through available openings and pathways through facilities.

Prior to the delivery of MCCs, obtain the shipping weight and the type of truck that will make the delivery to ensure that the proper handling equipment is available for receiving the shipment.

Coordinate the arrival of MCCs so that the installation of equipment pads and foundations is complete and ready to receive equipment upon delivery.

Review manufacturer installation instructions for any special storage conditions.

4.1 Delivery

Provide suitable protection against the weather, dust, and debris in accordance with the information in manufacturer manuals and drawings, keeping in mind that MCCs are frequently delivered on an open flatbed truck.

Upon delivery of equipment and accessories, visually inspect packaging for physical damage. Carefully unpack protective crates and packing sufficiently to inspect for concealed damage resulting from shipping and handling. If damage has occurred, immediately notify the shipper and the manufacturer in writing.

Compare equipment and accessories received with the bill of materials to verify that the shipment is complete. Verify that equipment and accessories received conform to approved submittals and manufacturer quotations. If the shipment is not complete or deviates from submittals or quotations, immediately notify the manufacturer in writing.

If equipment and accessories are to be stored prior to installation, restore original packing materials and protect from exposure to environmental conditions. When conditions permit, leave the packing materials intact until equipment and accessories are ready for installation. Follow manufacturer instructions for proper protection and storage of the equipment.

4.2 Handling

MCCs are typically large, bulky pieces of equipment, weighing several hundred pounds or more. Refer to the packing list for the actual weight of each item, and verify that the working load of the handling equipment is more than the weight to be moved. Follow the guidelines for sling safety in OSHA 3072.

Follow manufacturer handling instructions to avoid injury to personnel and damage to equipment. Handle MCCs carefully. Observe all packing and lifting warning labels.

Preferably, position MCCs in the final installation locations upon delivery. When MCCs are stored in other than the final installation location, coordinate storage to minimize handling.

Do not remove MCC shipping skids. Handling MCCs while attached to the shipping skids prevents distortion of the structural skeleton or frame during moving and minimizes tipping. Handle MCCs to maintain an upright position.

Handle MCCs carefully, especially considering that the instrument panel on the front of the equipment may contain delicate instruments, relays, meters, switches, and controls that are easily damaged. Avoid impact, jolting, jarring, rough handling, and other movements that could damage the MCC.

Preferably, use manufacturer-supplied lifting straps for handling MCCs. Provide vertical lift on the straps to stabilize the load and to avoid damage to the frame or finish. Maintain a minimum 45-degree angle above horizontal on lifting straps (see Figure 1). Secure lifting straps to a spreader or spanner beam to ensure that lifting straps are at a suitable vertical angle.

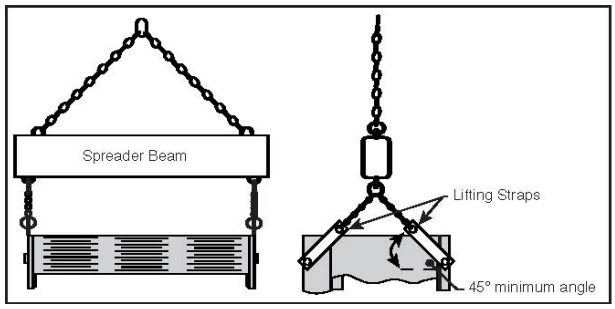

Figure 1: Handling MCCs with lifting straps

When lifting straps are not provided by the manufacturer, handle MCCs using slings, forklifts, and/or rollers. Manufacturers typically provide a handling warning if the use of straps would cause stress on the motor control equipment or if the design of the equipment does not permit using straps.

Slings. Use slings when lifting MCCs with a crane, hoist, or similar lifting device. Construct slings of chain or wire cable of sufficient rating to handle the weight of the equipment. Rig the sling completely around the equipment and its shipping stringers. Use wooden blocks to protect MCC components and finishes (see Figure 2). Pass slings underneath MCCs using a forklift or jacks to lift the equipment off the floor. Attach the sling to spanner bars using safety hooks and shackles. Do not pass ropes, chains, or cables through spanner bar lifting holes.

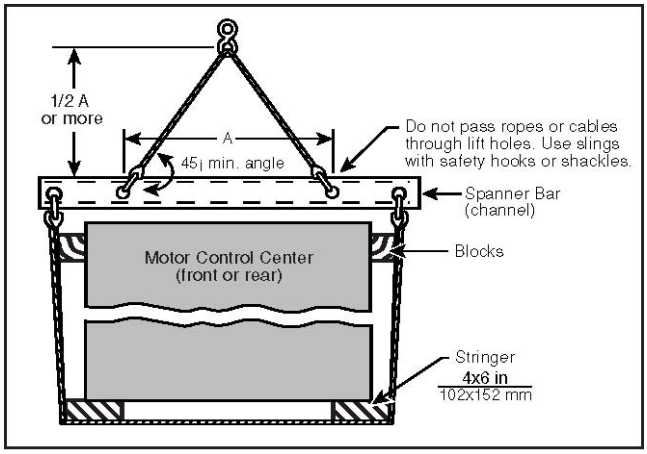

Figure 2: Handling MCCs with slings

Forklifts. Secure MCCs to forklifts using safety straps to prevent tipping or loss of the load. Extend forklift forks to the furthest possible left and right positions for maximum stability, and ensure that forks extend completely under the load and beyond the opposite side (see Figure 3).

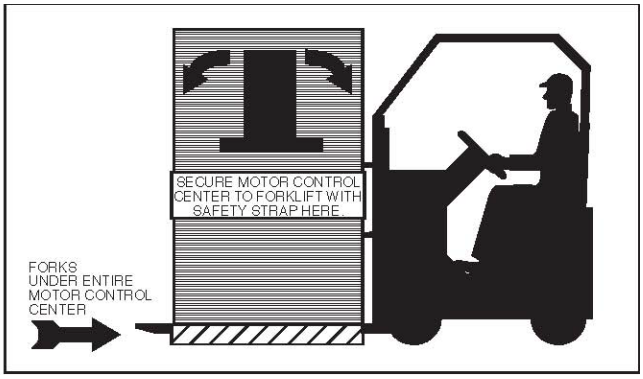

Figure 3: Handling MCCs with a forklift

Rollers. Where conditions do not permit using a hoist, crane, or forklift to lift MCCs, use rod or pipe rollers suitable for the purpose. Use rollers for essentially level surfaces. Use rollers at least as wide as the equipment to be moved, and position rollers approximately 18 inches apart. Use a forklift or jacks to lift and position equipment onto rollers. Use extreme caution to steady the load when using rollers. Use pinch bars to control movement of the load. When necessary to travel on an incline, use a winch or chainfall to prevent the load from accelerating downhill.

4.3 Storage

Preferably, store MCCs in locations where they will be permanently installed whenever possible. Alternatively, store MCCs indoors in a dry, heated space that is secure or monitored to discourage vandalism and theft, and out of the way of construction traffic.

Cover stored MCCs with tarps or plastic protective covers to protect against dust, moisture, and corrosion, giving special consideration to horizontal bus runs and openings in shipping splits. If packing is removed, cover the top and any openings of the equipment during the construction period to protect against dust and debris until final assembly is completed.

Storing MCCs outdoors has a significant risk of water damage to the MCC and is highly discouraged. Outdoor storage can result in water damage to MCCs, which contain components that must be replaced if contacted with water, such as molded-case circuit breakers, contactors, and starters. Water damage may necessitate replacing the MCC in its entirety. Consult the manufacturer for recommendations for storing MCCs outdoors.

If outdoor storage of the MCC is necessary, ensure that tarps or plastic protective covers are tightly secured to prevent tearing during wind gusts and severe weather conditions, and are watertight to protect against rain, snow, and condensation.

Protect MCCs from mechanical damage, corrosive gases or fumes, foreign objects, and rodents. Moisture in combination with cement dust is very corrosive.

Provide a reliable source of heat when storing MCCs outdoors or in an unheated indoor location. Maintain the internal MCC temperature approximately 10°F above ambient temperature during storage. Remove all cartons, miscellaneous packing materials, and any other combustible materials inside MCCs before applying heat.

Temporarily energize space heaters, if so equipped, from an outside source. Open the control power

transformer secondary disconnecting means, remove the primary fuses, and install an out-of-service tag before energizing space heaters from an outside source to prevent backfeeding the main bus through the control power transformer.

Use temporary heating sources for MCCs not equipped with space heaters. Provide a minimum of 250 watts of heat for each vertical section. Do not use sources of heat that generate smoke, grease, or other products of combustion that can deposit carbon on insulation, resulting in tracking, corona, and eventual insulation failure.

5. Site Preparation

Unless designed for other-than-normal service conditions, do not locate MCCs where exposed to ambient temperatures above 40°C (104°F), corrosive or explosive fumes, dust, vapors, dripping or standing water, abnormal vibration, shock or tilting, or other unusual operating conditions.

5.1 Location

Consult contract documents to determine the installation location. Verify that MCCs and accessories are suitable for the intended location.

Verify that the environmental rating of the enclosure, Type 1, Type 3R, Type 12, or other, is suitable for the location. If an MCC is to be installed in an area protected by fire suppression sprinklers, a Type 3R rating may be required. Verify requirements with the authority having jurisdiction. Advise the general contractor or owner of any discrepancies.

Maintain access points of MCCs, keeping in mind that MCCs may be accessed from the front, rear, top, and/or bottom.

Maintain the minimum headroom of working spaces about MCCs, either 2 meters (6-1/2 feet) or the height of the equipment, whichever is greater. In calculating headroom above the equipment, consider the height of the foundation and the height of the equipment.

Ensure that clearances comply with all applicable building codes and working space requirements of NEC Article 110. Working space clearances greater than NEC minimums may be required for maneuvering equipment and temporary ramps or hoists during installation.

Ensure that entrance to and egress from the working space complies with NEC Article 110.

Verify that appropriate illumination is provided for all working spaces about MCCs installed indoors.

Install MCCs with sufficient clearances for ventilation of equipment. Ensure that ventilation openings are not obstructed by walls, ceilings, or adjacent equipment.

For damp or wet locations, take appropriate measures to prevent moisture and water from entering and accumulating in MCCs. In locations where a sump pump is installed, ensure that the pump is working properly and connected to a standby power source before installing the MCC.

For cool or damp locations, it may be necessary to provide an appropriate supplemental heat source for

the area or within the MCC. Consult the manufacturer for recommendations.

5.2 Foundation Preparation

Provide a smooth, hard, level surface to support the weight of the MCC without bowing or sagging. Coordinate the installation of embedded conduits, including spare conduits, and MCC base channels, if provided, prior to placing concrete.

Install concrete equipment foundations in accordance with contract documents and manufacturer recommendations. Concrete equipment foundations are typically raised 102 mm (4 inches) above the general floor level, with the surrounding floor area gently sloping toward a drain.

Ensure that the maximum projection of embedded conduits and fittings is 76mm (3 inches) or less above concrete equipment foundation in accordance with the NEC, and 25 mm (1 inch) or less above the level of the MCC bottom plate. Consult the bottom-view drawings to verify that the conduit layout matches the available conduit entry space and to prevent any mechanical interferences. Block the opening of each conduit with material that rodents will not be able to gnaw through, squeeze through, or push out of the way, keeping in mind that bottom closure plates will not keep out rodents that enter through the conduits.

Install base channels in accordance with manufacturer instructions. Ensure that base channels are flat and level over the entire length of the MCC. Ensure that non-supporting areas of the foundation are lower than the tops of the steel channels. Grout base channels into the concrete equipment foundation.

Do not install continuous loops of reinforcing rods, structural steel, or circular cutouts of steel sheets or plates where circuits are installed in an isolated phase arrangement. *NOTE: An isolated phase arrangement is where the phase conductors of a three-phase system are installed in separate raceways; the phase conductors are physically isolated from each other*.

Consult local building codes and coordinate seismic requirements for MCCs prior to installation. In seismic locations, provide a minimum of 4000 psi concrete for foundations. Use manufacturer-recommended anchoring means, such as stud anchors, sleeve anchors, or concrete anchor bolts.

6. Installation

Proper installation is essential to the successful operation of all MCC components. Advance preparation and planning for installation is advisable. Request manufacturer instruction manuals, related literature, and drawings before the MCC is delivered, and study this material thoroughly before installation.

6.1 General

Install MCCs in accordance with contract documents, manufacturer instructions, and approved shop drawings.

Install MCC sections in final positions, progressively leveling each section and bolting frames of shipping splits together. Secure the MCC to walls or other supporting surfaces in accordance with manufacturer recommendations, if necessary. Do not secure MCCs with wooden plugs driven into holes in masonry, concrete, plaster, or similar materials.

Install MCC sections starting with the most restrictive section first. If the MCC has incoming cables or busway near or in its center, start with that vertical section first and work outwardly on each side. If the MCC is fed from the left-most section, start from the left and work toward the right. If the MCC is fed from the right-most section, start from the right and work toward the left. If the MCC is close-coupled to a transformer, start at the transformer and work away from the transformer.

Clean dirt and debris from the concrete equipment foundation and the surrounding area where the MCC will be located before moving the MCC into its final position.

Remove shipping skids before installing the MCC on the foundation.

6.2 Installing Vertical Sections

If MCC sections are equipped with bottom closure plates, temporarily remove these plates. Cut holes in MCC bottom closure plates that correspond to the conduits entering the bottom of each enclosure based on that section's conduits. Saw kerfs between conduit holes in bottom closure plates for isolated phase installations where individual phase conductors are run in individual conduits, such as duct bank risers. Reinstall bottom closure plates after the vertical sections of the MCC have been installed. Ensure that steel bottom plates are provided for MCCs installed on combustible surfaces.

Install MCC vertical sections in sequence. Position each section carefully. Follow handling instructions in Section 4.2.

Level sections with shims, if necessary, and align each section with the previous section. Ensure proper alignment for joining structures and through-bus. Improper alignment of the through-bus can result in personal injury, death, and/or property loss.

Lift each shipping section vertically into place using a crane, timbers, jacks, or a forklift to clear embedded conduit projections above the finished concrete equipment foundation, when necessary.

Remove lifting straps or slings so that vertical sections can be joined flush. Leave lifting hardware on the section if their removal is not required to join adjacent sections flush together.

6.3 Joining and Anchoring Motor Control Center Sections

Open all doors or remove all panels that provide access for bolting adjacent sections together.

Bolt sections together in accordance with manufacturer instructions, keeping in mind that the authority having jurisdiction may require that all bolts connecting bus sections be inspected for proper torque prior to closing up the MCC.

Anchor each vertical section to the base channel or foundation to protect against bumping or shifting that can damage interior components, conduit hubs, and cable and busway connections (see Figure 4).

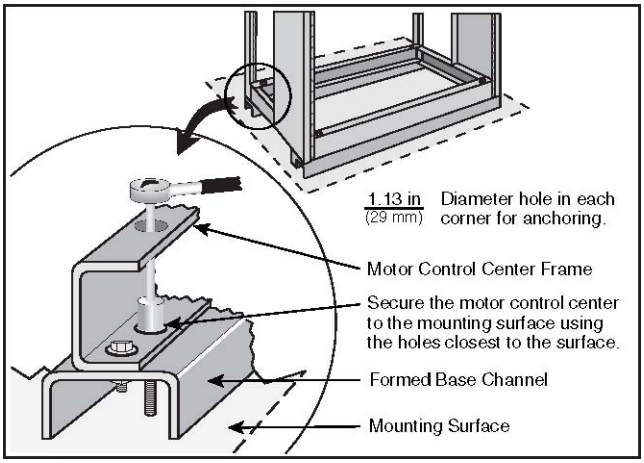

Figure 4: Anchoring the MCC

Anchor MCCs for seismic conditions in accordance with contract documents and local building codes.

Seal between the concrete foundation and the MCC structure completely to prevent the entry of rodents, rain, and snow.

6.4 Electrical Interconnections Between Vertical Sections

Vertical sections of MCCs are electrically linked together using through-bus or cables. Through-bus splice connections are extremely important to the performance of the MCC, because these connections carry the full current intended for the operation of the MCC. Failure to properly make through-bus splice connections can result in property damage, death, and/or serious injury. Ensure that each source is in phase across tie-breakers in double-ended equipment.

NOTE: Other than for required interconnections and control wiring, and with the exception of conductors that are isolated from the busbars by a barrier that are traveling horizontally between vertical sections, only those conductors that are intended for termination in a vertical MCC section are permitted to be located in that section.

6.4.1 Through-bus Splices

Through-bus splice kits are provided by the MCC manufacturer when more than one section is required to be electrically connected together by through-bus. The splice kits may be in separate boxes, be shipped inside the sections to be spliced, or be installed on the through-bus of one or more vertical sections.

Follow the proper sequence of hardware installation, as specified in the manufacturer installation instructions. Conical washers should be installed with the convex or “top” side against the nut (see Figure 5).

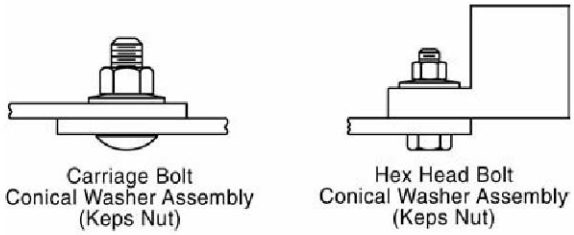

Figure 5: Proper positioning of conical washers

Torque each splice bolt to the values recommended by the manufacturer. In the absence of manufacturer torque tables, tighten terminals in accordance with Annex I of NFPA 70. Mark each torqued connection with a permanent marker.

Follow the manufacturer instructions for installing insulation on through-bus splice connections, if applicable.

6.4.2 Cable Interconnections

For cable interconnections between MCC sections, install interconnection cables between sections as shown on manufacturer drawings.

Interconnecting cables may or may not be supplied by the MCC manufacturer. When cables are not provided, size interconnecting cables in accordance with contract documents, manufacturer recommendations, and the NEC.

Torque all connections to the manufacturer recommended values. In the absence of manufacturer torque tables, tighten terminals in accordance with Annex I of NFPA 70. Mark each torqued connection with a permanent marker.

6.4.3 Ground Bus Splices

Ground bus splice connections are provided by the manufacturer when more than one section of the MCC is required to be electrically connected (see Figure 6). Proper installation of ground bus splice connections is essential to providing a low-impedance path to ground for temporary currents resulting from phase-to-ground faults.

Figure 6: Ground bus splice connections

At the time of delivery, ground bus splice kits may be contained in separate boxes, be installed on the ground bus of one or more sections, or be stored inside the MCC sections.

Follow the proper sequence of hardware installation, as specified in the manufacturer installation instructions. Conical washers should be installed with the convex or "top" side against the nut (see Figure 5).

Torque the splice bolts to the recommended value. In the absence of manufacturer torque tables, tighten terminals in accordance with Annex I of NFPA 70. Mark each torqued connection with a permanent marker.

6.4.4 Ground Cable Connections

Bond MCC vertical sections with an equipment grounding conductor or an equivalent grounding bus sized in accordance with NEC Article 250. If the MCC does not include a ground bus, provide bonding between sections in accordance with NEC Article 250.

Terminate equipment grounding conductors on the grounding bus or to a grounding termination point provided in a single-section MCC.

Torque all connections to the manufacturer recommended values. In the absence of manufacturer torque tables, tighten terminals in accordance with Annex I of NFPA 70. Mark each torqued connection with a permanent marker.

6.5 Grounding and Bonding

Ground and bond MCCs in accordance with manufacturer instructions and NEC Article 250.

Install conductors for ground-fault protection systems in accordance with the manufacturer interconnection wiring diagrams.

Where the MCC contains the first disconnecting means or overcurrent protective device of a separately-derived source, ground and bond the separately-derived source in accordance with Section 6.5.1 of this standard and NEC Article 250, where the system bonding jumper is the main bonding jumper referenced.

6.5.1 Service-Entrance Equipment

For ungrounded systems, install a grounding electrode conductor from the grounding electrode system to the ground lug of the MCC. Comply with NEC Article 250 for requirements for grounding electrode conductors. If there is no existing grounding electrode system, install a grounding electrode in accordance with contract documents, manufacturer recommendations, and the NEC Article 250.

For solidly-grounded systems, install a grounding electrode conductor in accordance with NEC Article 250 from the grounding electrode at the installation site to the grounding electrode conductor connection or ground lug on the MCC ground bus (see Figure 7).

Figure 7: Ground lug

Install a main bonding jumper in accordance with NEC Article 250 within one of the sections for MCCs where a grounded conductor or neutral is provided. Connect the supply side of the grounded conductor to the MCC equipment ground bus. *NOTE: A label on the front of the MCC will identify the section(s) that incorporate the main bonding jumper(s).* For MCCs with multiple sources, there will be two or more main bonding jumpers to install.

6.5.2 High-Impedance Grounded Neutral Systems

In accordance with NEC Article 250, high-impedance grounded neutral systems require that the conditions of maintenance and supervision ensure that only qualified persons service the installation, continuity of power is required, ground detectors are installed on the system, and line-to-neutral loads are not served from the equipment.

Connect the system neutral conductor to ground only through the grounding impedance. Where no

neutral conductor is available, install the grounding impedance between the grounding electrode conductor and the neutral derived from a grounding transformer, if so equipped. Ensure that no phase-to-neutral loads are served from high-impedance grounded neutral systems.

Install fully insulated neutral conductors sized for the maximum current rating of the grounding impedance, but not less than 8 AWG copper or 6 AWG aluminum or copper-clad aluminum. The conductor connecting the neutral point of the grounding resistor or transformer to the grounding impedance is permitted to be installed in a separate raceway.

Install an unspliced equipment bonding jumper from the first system disconnecting means or overcurrent protective device to the grounded side of the grounding impedance. Size the equipment bonding jumper in accordance with NEC Article 250 where the grounding electrode conductor connection is made at the grounding impedance, or with the same ampacity as the neutral conductor in Section 6.5.1 where the grounding electrode conductor is connected at the first system disconnecting means or overcurrent protective device.

Connect the grounding electrode conductor at any point from the grounded side of the grounding impedance to the equipment grounding connection at the service equipment or first system disconnecting means.

6.6 Installing Conduits

Install top- and side-entry conduits after MCC installation is complete. Route conduits entering the MCC in accordance with conduit entry drawings provided by the manufacturer for each section of the MCC to prevent cables and conductors from interfering with live bus or structural members.

Bond all conduits, stubs, and ring connectors to the enclosure in accordance with the manufacturer instructions.

6.7 Installing Cables and Conductors

To prevent cracking or freezing of the insulation, install conductors at ambient temperatures above freezing. As an alternative, use conductors that are suitable for installation at temperatures below freezing.

Verify that termination lugs are compatible with conductors prior to installing cables and conductors.

Install the most restrictive set of conductors first.

Unless installing an isolated phase arrangement, pass all phase and grounded conductors of the same circuit through the same metal opening together, as required by NEC Article 300, to prevent inductive heating within the MCC.

Ensure that cable pulling lubricants do not drip or come into contact with overcurrent protective devices or bus bar plating.

Use the largest practical bending radii to avoid damaging conductor insulation. Train and form conductors to minimize stress on terminals, minimize sag, and prevent physical damage or overheating. Check manufacturer instructions to determine which connections require sag to permit future maintenance

on the MCC.

Support cables and conductors independently of connections, terminations, and overcurrent protective devices. Protect cable and conductor insulation when conductors are in contact with structural members by placing suitable protective material at the contact point.

Brace or lace conductors in accordance with the manufacturer instructions or contract documents. Use approved materials on both vertical and horizontal wireways to support the load and interconnection wires. Secure incoming conductors to prevent or minimize separation under short-circuit conditions.

Provide a minimum of 76mm (3 inches) of slack in top-entering cables and conductors in geographic areas where seismic conditions apply to accommodate seismic movement. Provide sufficient slack in bottom-entering cables and conductors to accommodate seismic movement.

Install approved cable hubs and ring connectors to prevent moisture from entering conduits or the MCC enclosure.

Protect very low-voltage signals, such as those transmitted from programmable controllers, computers, and field-mounted control devices, by using shielded cables inside flexible metal conduits. Maintain the separation between such low-voltage signal conductors and power conductors by providing suitable barriers in vertical and horizontal wireways.

6.8 Terminating Conductors

Strip a sufficient length of insulation from the conductor end to fit into the full length of the lug barrel using an appropriate insulation stripping tool to avoid nicking conductor strands. Avoid stripping cable beyond the length of the lug barrel.

Torque mechanical lug or set-screw type connectors in accordance with manufacturer instructions to avoid stripping threads or cracking the lug body. In the absence of manufacturer torque tables, tighten terminals in accordance with Annex I of NFPA 70.

Crimp compression connectors using tools and dies recommended by the lug manufacturer. Remove excess compound, if required.

Use connectors specifically tested and approved for use on aluminum conductors. Clean contact surfaces by removing oxides from aluminum conductors. Apply antioxidant joint compound to the conductor unless provided in the connector. Use joint compound compatible with conductor insulation and as recommended by the manufacturer. Insert the conductor immediately into the connector after cleaning and application of compound, if required.

6.9 Busway Connections

Power is often distributed to MCC units using busway or bus duct. Busway is provided in different configurations by different manufacturers. One sample configuration is shown in Figure 8.

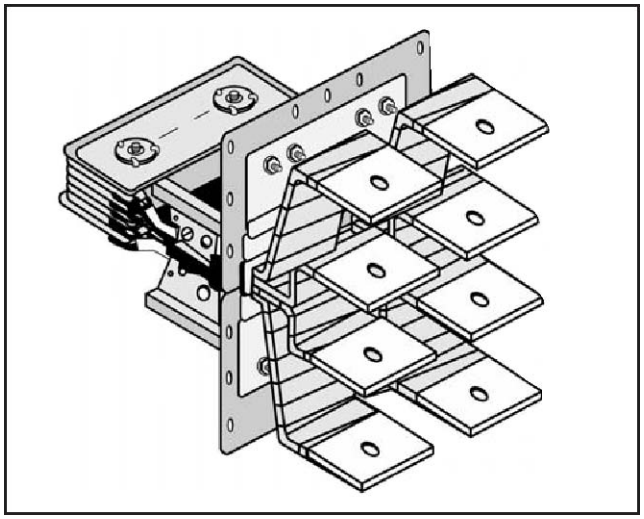

Figure 8: Busway (bus duct) connection

Install busway in accordance with NECA 408, *Standard for Installing and Maintaining Busways* (ANSI).

Support the busway independently of the MCC.

Install conical spring-steel or Belleville-type washers such that the convex side of the washer is against the nut (see Figure 5). Tighten conical spring-steel or Belleville washers according to the manufacturer instructions, if provided. If not provided, retighten until the washer is flat.

Confirm proper phasing of busway and MCC connections before energizing.

6.10 Installing Motor Control Units

Follow the manufacturer instructions to install motor control units and doors.

Carefully unpack motor control units to avoid damage. Examine for shipping damage and verify that units are correct for the installation. Verify that the correct doors are provided.

Turn both the main disconnecting means for the MCC and the unit disconnecting means to the “OFF” position. Install motor control units in the MCC.

Make wiring connections in accordance with wiring diagrams and manufacturer instructions. When units are rear-mounted and the motor control sections have a common vertical bus, verify that the wires to the motor leads are in proper phase sequence, and that motor control units are marked for the phase arrangement.

7. Closing Equipment

7.1 Clean-up

Remove any remaining packing material from MCC enclosures, including foam blocks and temporary cushioning.

Remove all foreign objects, such as tools, scraps of wire, and other debris.

Clean all traces of cable-pulling compound residue from MCC components using clean, lint-free cloths dampened with clean water.

Vacuum all MCC compartments to remove all dust and debris. Do not use compressed air. Compressed air may contain moisture, which can lead to corrosion, and may cause dust to settle inside devices, impairing their ability to function.

7.2 Inspections and Adjustments

Because of the diversity of MCC components, follow all manufacturer instructions for inspecting and adjusting components.

Visually check the bus insulators for cracks, and check bus supports for alignment and damage.

Check to ensure that dents or other damage to the enclosure have not resulted in clearances that violate NEC requirements.

Check that all circuits and conductors are installed in accordance with manufacturer instructions and wiring diagrams. Verify that all interconnecting wiring between sections of the MCC has been connected. Ensure that field wiring does not contact live bus, and that the wiring is properly braced and secured to withstand the effects of fault currents. Check that each motor is connected to its intended starter.

Check all bus bar connections, circuit breaker and switch terminals, contactor and relay terminals, terminal blocks, lug terminations, and conical spring-steel or Belleville washers for tightness. Torque connections to manufacturer requirements. In the absence of manufacturer torque tables, tighten terminals in accordance with Annex I of NFPA 70. If manufacturer instructions are not provided for conical spring-steel (Belleville-type) washers, retighten until washers are flat.

Check to determine that all grounding connections are made properly. Ensure that MCC sections are bonded when no ground bus is provided. Check ground-fault circuitry, if installed, to ensure that there are no grounds on the grounded or neutral conductor downstream from the service entrance point of the installation.

Verify that the MCC overcurrent protective device, either located ahead of the MCC, or located within the MCC, has a rating that does not exceed the rating of the common power bus.

Verify that MCCs that are rated as service equipment are provided with a single main disconnecting means.

Correct any identified discrepancies in accordance with manufacturer instructions.

7.3 Insulation Resistance Testing

If a short-circuit or ground-fault condition exists and is not identified and corrected during insulation resistance testing, serious personal injury and/or equipment and property damage can result when the

MCC is first energized.

Perform insulation resistance testing using a 1000 VDC megohmmeter to assure that the MCC and field wiring are free from short circuits and grounds.

Disconnect and isolate conductors, components, and equipment normally connected to equipment under test, including phase and neutral connections, surge arrestors, capacitors, meters, relays, and control power and instrument transformers. Remove all instrumentation and control fuses prior to testing. Disconnect all accessories and electronic devices, such as solid-state relays and controllers, which may be subjected to the test voltage. Perform testing with no loads connected to the MCC.

Apply test voltages in accordance with transformer and test equipment manufacturer instructions. Follow manufacturer instructions for solid-state electronic components. Insulation-resistance measurements on any instrument transformer should be in accordance with transformer and test equipment manufacturer instructions. Ground conductors, components, and equipment not being tested. Ground each phase at the completion of each test.

Test insulation resistance from phase-to-phase, phase-to-ground, and from phase-to-neutral, where available. Perform testing for all circuits with circuit breakers and switches in both the open and closed positions.

Test current transformers from wiring-to-ground, and test control wiring. Measure insulation resistance at one minute following the application of the test voltage.

Test potential transformers and control power transformers, from winding-to-winding and each winding-to-ground, recording measurements at one-minute intervals for 10 minutes.

Measure the insulation resistance of each combination starter, phase-to-phase and phase-to-ground, with the starter contacts closed and the protective device open. Refer to manufacturer instructions for devices with solid-state components.

Record test values for future reference on the insulation resistance chart shown in Section 9.

Insulation resistance values for bus, circuit breakers, control power transformers, voltage transformers, and current transformers should be in accordance with the manufacturer published data. Control wiring insulation resistance should be a minimum of two megohms.

Consult the MCC manufacturer published data for acceptable test results. If published data is not available, investigate any values that deviate from previous test results under similar conditions by more than 50 percent of the lowest value. Investigate any results less than 1 megohm with the overcurrent protective devices in the open position for possible tracking on insulation or insulation breakdown. Correct any deficiencies.

7.4 Circuit Breakers and Fusible Switches

Manually exercise all switches, circuit breakers, and other operating mechanisms to ensure smooth operation.

Electrically exercise all electrically-operated switches, circuit breakers, and other mechanisms to determine that the devices operate properly. Use an auxiliary source of control power for electrically-

operated devices.

Set any adjustable current and voltage trip mechanisms to the proper values. *NOTE: Damage from faults can be reduced if devices used for short-circuit and ground-fault protection are set to operate instantaneously, or with no intentional time delay, at 115 percent of the highest value of phase current that is likely to occur as the result of any anticipated motor starting currents*.

Consult the coordination study for protective and control device settings. *NOTE: The coordination study is typically prepared by the consulting engineer, or by other persons responsible for setting up the MCC. Settings are not found on the manufacturer installation or shop drawings.*

Adjust the instantaneous or magnetic trip on thermal magnetic circuit breakers and motor-circuit protectors to their proper settings based on the coordination study or MCC schedule. Do not exceed the magnetic trip value of instantaneous-trip circuit breakers specified in NEC Article 430.

Adjust instantaneous, short-time, long-time, and ground-fault settings of electronic circuit breakers. If values are not provided, consult the circuit breaker manufacturer instruction manual for values that will set the electronic circuit breaker to function with thermal magnetic circuit breaker characteristics.

Check that overload relays or heater elements are installed and selected or adjusted or any combination thereof to the full-load current shown on the nameplate of each motor and manufacturer instructions. Check that solid state overload relays, relays with integral phase and ground-fault protection, and other than full-voltage starters, such as autotransformers, solid-state, wye-delta, part-winding, and adjustable-speed drives, are adjusted in accordance with contract documents and manufacturer instructions. Check that fuses, overload heater ratings, or solid-state overload ratings or settings are properly selected for power-factor correction capacitors connected to the load side of the protection.

Install all power and control power fuses. Install fuses so that rating information is visible without removing the fuses. Ensure that fuses are firmly inserted in the clips provided. Do not attempt to defeat fuse clip rejection features. Check fuse current ratings for NEC compliance.

Remove shorting bars from the secondary of current transformers. Do not operate a current transformer with its secondary circuit open. Exercise extreme caution around current transformer circuits. A current transformer carrying primary current can develop high secondary terminal voltages if the secondary terminals are open-circuited.

7.5 Ground-Fault Protection Systems

Check circuiting for ground-fault protection systems with manufacturer interconnection wiring diagrams. Correct any discrepancies.

Conduct performance testing of ground-fault protection systems in accordance with the manufacturer instructions provided with the equipment. Maintain a written record of all testing.

Use a certified third-party testing firm when required by contract documents or by the authority having jurisdiction.

Use factory-trained representatives for adjusting and testing zone-selective ground-fault protection systems.

Ensure that the ground-fault protection system is fully operational at the conclusion of all testing and prior to placing MCCs into service.

See Section 9.4.8 for additional guidance.

7.6 Final Checks

Ensure that all parts and barriers that were removed during wiring and installation have been properly reinstalled.

Remove all metal chips, scrap wire, foreign objects, dust, and other debris from the MCC interior. Clean equipment and components using a brush, vacuum cleaner, or clean, lint-free rags.

Replace all barriers and covers, and close all doors. Check for pinched wires. Check enclosure parts for proper alignment. Check that all doors and covers are fastened securely.

Open all circuit breakers and switches.

7.6.1 Labeling

Verify that the MCC is marked in accordance with NEC Section 110.21, and includes the common power bus current rating and the MCC short-circuit rating.

Verify that motor control units within MCCs comply with NEC Section 430.8.

Verify that MCCs are field or factory marked with warning signs and labels to warn qualified persons of potential electric arc flash hazards in accordance with NEC Section 110.16. Ensure that labeling for service equipment rated 1200 amps or more includes the following additional information:

- Nominal system voltage
- Available fault current at the service overcurrent protective devices
- The clearing time of service overcurrent protective devices based on the available fault current at the service equipment
- The date the label was applied

Markings should be clearly visible to qualified persons before examination, adjustment, servicing, or maintenance of the equipment. Refer to NFPA 70E, *Standard for Electrical Safety in the Workplace,* for assistance in determining the severity of potential exposure, planning safe work practices, and selecting personal protective equipment. Refer to ANSI Z535.4, *Product Safety Signs and Labels,* for guidelines for the design of safety signs and labels for application to products.

8. Energizing Equipment

Hazards exist when energizing electrical equipment. Use proper safety and personal protective equipment. Follow manufacturer safety precautions and established safety procedures using appropriate tools and test equipment. See Section 3, Safety Procedures.

Consult the MCC manufacturer for any abnormal operating conditions encountered. Qualified personnel should be present when the equipment is first energized. If short circuit or fault conditions caused by

damage or poor installation practices have not been detected, serious personal injury, death, and/or property damage or loss can occur when the equipment is first energized.

8.1 General

Energize equipment in accordance with manufacturer instructions. Exercise caution around MCCs with external sources of control power, and MCCs supplied from more than one primary source of power, including MCCs with integral source transfer switches and main-tie-main equipment. Verify that all sources of power are removed before working on such equipment.

Before energizing digital meters, ensure that all ground connections are securely connected and that the supply voltage is within the allowed range of the meter's power supply.

Check control functions, interlocks, and alarms for proper operation, and check voltage, current, and phasing as components are energized. Measure and record phase-to-phase, phase-to-neutral, phase-to-ground, and neutral-to-ground voltages, where available as components are energized.

Measure and record the incoming line voltage of MCCs at each step during energization. Undervoltages, overvoltages, and phase imbalances affect performance, efficiency, operation, and life expectancy of motors, contactors, overload devices, and overcurrent protective devices.

Listen for excessive contactor hum, chattering, and sizzling as evidence of abnormal operating conditions. Investigate hardware that has not been tightened or metal parts that are improperly assembled as possible sources of extraneous noise.

De-energize equipment and make corrections or repairs for any abnormal operating conditions in accordance with manufacturer instructions. Inspect all parts for evidence of overheating and evidence of physical damage, including worn insulation and corrosion, as components are energized. Inspect terminals for loose or broken connections, burned insulation, and other evidence of thermal damage.

Perform acceptance testing in accordance with contract documents and manufacturer recommendations. *NOTE: Often, construction contracts require testing of MCCs by an independent third party. Refer to InterNational Electrical Testing Association's Acceptance Testing Specifications for further guidance. Also see Section 9, Maintenance, for further guidelines for inspections and testing.*

8.2 Energizing Motor Control Centers and Equipment

Prior to energizing, ensure that there is no load on the MCC. Verify that all circuit breakers and other overcurrent protective devices are open, and that all switches and controls are in the "OFF" position, including all contactors, heaters, and motors, and any other controls or loads that are remote from the MCC.

Verify that the insulation rating of all power, control, communication, and data conductors in raceways entering the MCC are either rated 600V, or that separation is provided as required by NEC Articles 300, 725, 727, and Chapter 8. Replace lower-rated conductors with 600V rated conductors, or provide separation in accordance with the NEC.

Close the source circuit breaker to energize the input feeder(s) to the MCC. Check the voltage and phasing at the primary terminals of the MCC. Check the phasing of MCCs with more than one primary

source of power, including MCCs with integral source transfer switches and main-tie-main equipment prior to connecting loads. *NOTE: If phasing is not checked prior to energizing rotating machinery, motors and connected mechanical loads and equipment can be damaged by reverse rotation*.

Close the main disconnecting means on the MCC, if so equipped. Verify proper source transfer operation for MCCs with more than one primary source of power, including MCCs with integral source transfer switches and main-tie-main equipment. Correct any issues with source transfer operation prior to connecting loads to the MCC.

Energize individual components sequentially from the source toward the load, close main, feeder, and branch circuit devices in sequence. Measure voltages and currents at each step. Close circuit breakers and disconnect-switch operating handles sequentially, using a firm, decisive motion.

Energize downstream loads, contactors, heaters, starters, and motors sequentially. Check each motor for proper phase rotation (clockwise/counterclockwise) with respect to the load. *NOTE: Three-phase NEMA motors rotate counterclockwise from the motor shaft end of the motor when connected A-B-C/L1-L2-L3 when the branch circuit is a counterclockwise rotation A-B-C.* Correct any issues with motor phase rotation.

Inspect all indicating and control devices for correct operation.

Configure digital metering, communication, and programming in accordance with manufacturer recommendations and owner preferences.

Perform startup of adjustable speed drives in accordance with manufacturer instructions. Calibrate drives to the minimum and maximum speed control signals. Perform operational tests by initiating control devices, including remote start/stop and speed control signals. Check motor rotation operating on the drive and on the bypass. Slowly vary drive speed between minimum and maximum, observing the motor and the load for unusual operation or vibration. Program drives to step over frequencies where excessive vibration occurs. Measure and record the total voltage and current harmonic distortion of each drive. Adjust overtemperature controls for adjustable-speed drive systems in accordance with manufacturer instructions.

Verify proper operation of electronic equipment, such as adjustable speed drives and digital metering. Note whether communications are acknowledged by flashing LED lights on the equipment, if so equipped. Scroll through the display settings and review the data and settings displayed to verify proper operation, that proper units are displayed, and that displayed quantities are accurate.

Record the programming parameters and settings of all electronic components, such as digital metering and adjustable speed drives, and maintain for future reference.

Measure load currents. Verify that total continuous load currents do not exceed the current rating of the MCC. For all overcurrent protective devices, verify that load currents do not exceed 80% of circuit breaker or fuse ratings, or 100% of circuit breakers rated for 100% operation. Check terminations and lugs for proper ampacity and temperature ratings. Verify that load currents do not exceed the ampacity of terminations and lugs. Replace terminations and lugs with inadequate ratings.

Verify correct function of control transfer relaying located in MCCs with multiple sources of control power, if so equipped.

Perform an infrared survey in accordance with Section 9.4.1.

Reinstall doors and access panels. Re-energize equipment.

8.3 Operating and Maintenance Manuals

Deliver all manufacturer packing label warnings, instruction manuals, literature, as-built drawings, recorded test values, set values of adjustable trip devices, settings of programmable devices such as adjustable speed drives and digital meters, and special tools to the owner or general contractor at the completion of the installation.

Record and retain the available short circuit current at the MCC and the date the short circuit current calculation was performed along with the operating and maintenance manuals, and make available to those authorized to inspect the installation in accordance with NEC Section 430.99.

9. Maintenance

Periodic MCC maintenance extends service life and increases reliability. Maintenance typically includes visual checks, cleaning, inspecting, lubricating, exercising, and testing equipment and components. Follow manufacturer instructions. Consult the manufacturer for recommendations for cleaning, and for repairing or replacing damaged or worn parts and components.

Maintenance should only be performed by qualified personnel trained to energize and de-energize electrical equipment in accordance with established safety practices.

Cleaning, servicing, maintenance, repairs, and testing should be performed on MCCs that are de-energized and electrically isolated, unless required for testing, so that no accidental contact can be made with energized parts. Follow all manufacturer instructions and safety precautions, and established safety procedures using appropriate tools, test equipment, safety equipment, and personal protective equipment. See Section 3.

Exercise caution when maintaining MCCs to prevent unscheduled outages. Schedule inspections and maintenance at times that will least affect operations, and to minimize outages. Do not initiate inspections and maintenance until all users have been notified.

Take corrective action for any item found to be deficient. Follow the manufacturer instructions for repairing and replacing equipment and components.

9.1 Frequency of Inspections and Maintenance

Perform routine inspections periodically for MCCs that are energized and in service. Use the rate of accumulation of dust and moisture on visible surfaces as a guide for scheduling cleaning, inspections, maintenance, and testing.

Inspect MCCs within 6 months of the original installation under normal operating conditions.

Perform cleaning, inspections, maintenance, and testing at least annually, but as often as the operating environment requires.

Perform cleaning, inspections, maintenance, and testing following any unusual operating condition in accordance with Section 10.

Recommended intervals for cleaning, inspections, maintenance, and testing should be adjusted accordingly for the operating environment, such as duty cycle, ambient temperature, exposure to contaminants, age and condition of the equipment, manufacturer recommendations, and trending established through testing.

9.1.1 Record Keeping

Keep complete maintenance and testing records for each MCC to track changes in electrical characteristics over time. Records should include nameplate data, ratings, installation date, reference drawings, manufacturer instructions, and spare part data.

Record the date, time, and environmental conditions, such as temperature and humidity, during testing. Note whether equipment is housed in conditioned space. Note weather conditions for outdoor equipment.

Update records to reflect dates of inspections, testing, maintenance, a summary of work performed with complete log notations, test results, meter readings, details of any unsatisfactory conditions, corrective actions taken, parts replaced, identification of servicing personnel, and documentation of satisfactory tests immediately following any repair.

Review maintenance records periodically to identify performance trends and changes in electrical characteristics over time.

9.2 Routine Inspections

Inspect areas and spaces around MCCs for any accumulation of dirt, dust, or debris. Remove any accumulations of dirt or dust. Remove trash, combustible material, and other debris from areas around MCCs.

Measure and record the ambient temperature around MCCs. Check the operating temperature of MCCs that have been operating under normal loading and at normal ambient temperature for a minimum of 3 hours by measuring the surface temperature of enclosures, access covers, doors, circuit breakers and switches. If temperatures exceed manufacturer recommendations, de-energize the MCC and investigate sources of overheating.

Inspect MCCs and enclosures for external signs of overheating, such as discoloration, flaking paint or flaking labels. Check equipment installed near MCCs as possible external sources of heat. Eliminate external sources of heat to MCCs.

Measure and record voltages and load currents, if possible, noting the date and time of day. Provide comments regarding known causes of variations in loading, such as load additions or equipment maintenance outages. Inspect all indicating devices for correct operation.

Check all accessible exterior MCC and cabinet hardware for tightness. Visually inspect cabinets for physical damage. Repair physical damage, if practical and approved by the manufacturer. Consult the owner and MCC manufacturer for recommendations for suitable protective barriers to prevent future

damage.

Inspect areas and spaces around MCCs for evidence of water or moisture. Look for any recent changes in sprinklers or other plumbing that might expose indoor MCCs to a source of liquids. Eliminate sources of or provide suitable protection from water, moisture, or liquids to MCCs.

Verify operation of MCC heaters, if so equipped.

9.3 Cleaning

Maintain adequate ventilation during cleaning.

Prior to cleaning, visually inspect MCC for evidence of discoloration, dust accumulation, metal shards, or any other indication of overheating, wear, or other abnormal conditions.

Note any unusual conditions such as signs of insects or rodents. If possible, take corrective action to prevent the condition from recurring.

Clean the MCC interior with a vacuum cleaner, soft-bristled brushes, or clean, dry, lint-free cloths to remove any accumulation of dust, dirt, or other foreign matter. Do not use liquids, solvents, or detergents when cleaning MCCs or components. Avoid blowing dust into MCCs. Do not use a blower or compressed air.

Clean bus bars, conductors, supports, insulators, terminals, and other major insulating surfaces and other parts with clean, dry, lint-free cloths or soft-bristled brushes. Do not use chemicals or petroleum-based solvents on plastics or insulating materials, since these may degrade plastics or insulating materials. Clean ventilation openings of enclosures and internal components.

Thoroughly clean fusible switches inside and outside.

Remove dust, soot, grease, moisture, and foreign material from surface of circuit breakers, adjustable speed drives, and other internal MCC components.

9.4 Inspection, Maintenance, and Testing

The following inspection, maintenance, and testing procedures are intended to identify operational and aging issues associated with MCCs. MCCs are subject to vibration from magnetic contactor operation and movement from motor starting currents and thermal cycling. As a result, hot spots develop, insulating gaps reduce, and insulation ages prematurely.

9.4.1 Infrared Scan

Provide supplemental barriers and use safety precautions during infrared scans to prevent accidental contact with exposed energized components. Comply with NFPA 70E, *Standard for Electrical Safety in the Workplace.* Use appropriate personal protective equipment.

Infrared surveys are recommended for equipment that cannot be de-energized and taken out of service or

where an outage is problematic.

Infrared surveys should be performed during periods of maximum possible loading, but not less than 40% of the capacity of the electrical equipment, as infrared surveys may not accurately depict the resistance of high-capacity connections and terminations when loaded below 40% of capacity.

Do not test equipment when exposed to direct sunlight. Perform infrared inspections of outdoor equipment at night or when equipment is not exposed to direct sunlight.

Shiny surfaces do not emit radiation energy efficiently, and can be hot while appearing cool in an infrared image. Additionally, plastic and glass covers in electrical enclosures are not transparent to infrared radiation.

Perform an infrared scan in accordance with MCC and test equipment manufacturer recommendations.

Use infrared test equipment that detects emitted radiation and converts detected radiation to a visual signal. Imaging equipment should be capable of detecting a minimum difference of 1°C at 30°C. Provide documentation of equipment calibration.

Render equipment electrically safe in accordance with Section 3. Remove all accessible covers, plates, weathershields, and doors necessary to reveal bus, conductors, connections, terminations, and other current-carrying components. Energize equipment in accordance with Section 8.2, turn on all normal loads, and perform scan.

Perform infrared testing of all accessible current-carrying devices, such as bus, circuit breakers, switches, instrument transformers, meters, motor starters, contactors, adjustable speed drives, and protective and control relays while energized and operating under the maximum load conditions possible.

Investigate differences in temperature gradient in accordance with MCC, component, and test instrument manufacturer recommendations. Typically, temperature differences of 1°C to 3°C between similar components under similar components under similar loading are normal. Temperature differences of 4°C to 15°C indicate possible deficiencies that warrant investigation. Temperature differences of greater than 15°C indicate probable deficiencies and warrant investigation. Repair or replace suspect electrical equipment, terminations, and connections in accordance with manufacturer recommendations.

Repeat infrared testing of deficient areas after repairs have been made. Prepare a report identifying the equipment and components tested and describing the results of the infrared scan. Include notations of deficiencies detected, temperature differences between the areas of concern and reference areas, probable causes of temperature differences, load conditions at the time of inspections, and recommended actions. Provide thermal photographs of each deficient area. Identify areas that were not inspected or observed due to inaccessibility.

Upon completion of infrared testing, render equipment electrically safe in accordance with Section 3. Reinstall all accessible covers, plates, weathershields, and doors that were removed prior to scanning. Energize equipment in accordance with Section 8.2 and turn on all normal loads.

9.4.2 General

Compare equipment nameplate data with the latest facility one-line diagram, if available. Check MCC circuit labeling for accuracy.

Verify appropriate anchorage, required area clearances, and correct alignment. Verify that components are properly installed and supported.

Inspect overall general condition for physical damage, broken studs, and loose or damaged wires, connectors, and terminations. Carefully inspect all MCC devices for any worn-out, cracked, or missing parts. Check all bolts, nuts, washers, and pins for tightness. Tighten or use manufacturer replacement parts as required.

Inspect all doors, panels, and sections for corrosion, dents, scratches, fit, and missing hardware, and for signs of rust, corrosion, or deteriorating paint. Check for evidence of localized heat damage to paint. Investigate sources of heat. Correct internal sources of heat. Remove external sources of heat. Repair damaged painted surfaces. Check that covers and doors are in place and fastened.

Inspect the inside of the MCC for moisture, condensation build-up, or signs of previous wetness. Moisture causes insulation failure and rapid oxidation of current-carrying components. Pay particular attention to conduit entrances and leaks at the top of the MCC between sections. Remove any moisture present inside the MCC. Seal off all leaks, cracks, or openings that have allowed moisture to enter equipment. Replace any components that show evidence of damage from moisture.

Inspect MCCs and internal components for evidence of overheating, such as discoloration and flaking of insulation or metal parts, arc spatter, sooty deposits, and tracking. Investigate and correct sources of arcing or overheating and replace damaged parts.

Verify that fuse and/or circuit breaker ampere ratings, interrupt ratings, and types correspond to record drawings, if available, and are properly sized for the motors served based on the motor nameplate information. Ensure that conductors are protected within their ampacity.

Record settings of adjustable circuit breakers and compare with the engineering coordination study supplied by the owner, if available. Notify the owner of discrepancies between actual circuit breaker settings and the coordination study, if available.

Verify that all key interlocks and door interlocking provisions are working properly. Examine the operation of all electrical and mechanical interlocks and padlocking means. Adjust in accordance with manufacturer instructions when necessary for proper operation.

Verify appropriate contact lubricant on moving current-carrying parts. Verify appropriate lubrication on moving and sliding surfaces. Ensure that oil or grease, where used, is applied only to surfaces recommended by the manufacturer. Wipe off excess lubrication to avoid contamination.

Verify that air filter media is in place and/or vents are clear.

9.4.3 Terminations, Connections, and Lugs

Verify the tightness of accessible bolted electrical connections using a calibrated torque-wrench. Comply with the manufacturer-recommended torque values. In the absence of manufacturer torque tables, tighten terminals in accordance with Annex I of NFPA 70.

Inspect bus bars and bus bar assemblies for evidence of pitting, corrosion, discoloration, and annealing due to heat. Replace damaged components using manufacturer recommended components. Use

hardware and washers of a grade identical to or better than the hardware being replaced. Retighten conical spring-steel or Belleville washers according to manufacturer instructions, or retighten until washers are flat, if no instructions are available.

Consult manufacturer instructions concerning bus bar joints and retorque where required, keeping in mind that some manufacturers indicate that their joints are maintenance-free and that additional tightening after installation may degrade connections.

Inspect insulators for evidence of physical damage or contaminated surfaces. Inspect terminations, connections, and lugs for alignment, physical damage, burns, corrosion, discoloration, flaking, thermal damage, arcing, pitting, melting, deterioration, carbonization, cracks, chips, breaks, partial discharge, or moisture. Check terminations and lugs for proper ampacity and temperature ratings. Verify that load currents do not exceed the ampacity of terminations and lugs. Replace terminations and lugs with inadequate ratings. Investigate and eliminate sources of damage. Replace overheated connections. Repair or replace damaged components.

Check all terminations, connections, and lugs for tightness using a calibrated torque wrench or screwdriver. Do not overtighten or strip threads.

Plated parts may become dark over time from oxidation. Do not remove the discoloration or abrade the plating, as it will reduce the thickness of the plating.

9.4.4 Conductors and Raceways

Verify that the insulation rating of all power, control, communication, and data conductors in raceways entering the MCC are either rated 600V, or that separation is provided as required by NEC Articles 300, 725, 727, and Chapter 8. Replace lower-rated conductors with 600V rated conductors, or provide separation in accordance with the NEC.

Inspect supply conductors and terminations for overheating, discoloration, and oxidation. Investigate and correct any deficiencies.

Inspect conductors for frayed, broken, or missing strands, rust, corrosion, discoloration, arcing, pitting, melting, and flaking of insulation and/or metal parts. Repair, replace, or rework damaged components.

Visually check the MCC, cables, and raceways for proper grounding and bonding. Correct improper grounding and bonding.

Inspect conduits for moisture. Seal conduits that are a source of moisture and provide a means to drain moisture away from the MCC, if possible.

Check set-screws in all raceway connectors for tightness and for stripped threads. Replace or repair raceway connectors as necessary using manufacturer-recommended parts.

Inspect aluminum conductors for extrusion and rework terminations, if required, keeping in mind that repeated tightening of loose connections will extrude aluminum conductors and may cause adverse operating conditions.

9.4.5 Switches

Check switches for damage, broken or missing parts, corrosion, rust, and dirt. Exercise each switch several times, checking for free movement, proper spring tension, and excessive wear. Verify proper blade penetration, travel stops, and mechanical operation. Adjust, repair, or replace defective devices in accordance with manufacturer instructions.

Inspect contact surfaces, blades, and jaws for discoloration, overheating, pitting, arcing, and corona. Clean and dress readily-accessible copper electrical contacts, blades, and jaws in accordance with manufacturer instructions. Many contact surfaces, such as arcing contacts, are silver tungsten or other types of materials that must never be dressed. When contacts of these materials require maintenance, they must be replaced.

Examine all readily-accessible arc chutes and insulating parts for cracks or breakage and for arc splatter, sooty deposits, oil, or arc tracking. Clean off arc splatter, oil, and sooty deposits, and inspect for burning, charring, or carbon tracking. To determine whether such wear requires replacement, consult manufacturer instructions. Replace insulating parts and arc chutes that are cracked or broken.

Measure the contact-resistance across each switch blade and fuse holder of each switch. Investigate any contact resistance values that deviate from adjacent poles or similar switches by more than 25 percent. Microhm or millivolt drop values must not exceed the high levels of the normal range as indicated in the manufacturer published data. If the manufacturer data is not available, investigate any values that deviate from similar connections by more than 50 percent of the lowest value.

Tighten fuseholder connections in accordance with manufacturer instructions. Inspect each fuse holder to determine whether it seems to be adequately supporting the fuse and that the fuseholder is securely attached to the mounting base.

Examine fuse clips for discoloration, overheating, corrosion, or physical damage. If there is any sign of overheating or looseness, check the spring pressure, and the tightness of clamps. Check fuse clip spring pressure with that of similar fuse clips in the MCC. Replace weak or burned clips with new fuse clips and suitable clamps using manufacturer-recommended replacement parts.

Lubricate the operating mechanism and sliding contact surfaces, if required, according to the manufacturer instructions. If no instructions are given on the devices, sliding copper contacts, operating mechanisms, and interlocks may be lubricated with clean, light grease. Wipe off excess lubrication to avoid contamination.

9.4.6 Fuses

Turn off power before replacing fuses. See Section 3. Check both the line and load ends of fuses for the presence of voltage before replacing fuses. Turn fusible switches to the “OFF” position before opening doors. Do not defeat cover interlocks to gain access to fuses. Visually check the position of the switch blades to confirm that all switch blades have disconnected from their line connection. If all switch blades are not in the correct position, consult the manufacturer for recommendations.

Clean contact areas of fuses and fuse holders. Clean the insulating area of fuses.

Check all fuses to ensure that the correct rating and type are installed. Replace renewable fuses with modern current-limiting fuses that fit into the same fuse clips. Ensure that non-current-limiting devices are not used as replacements for current-limiting devices. Do not defeat rejection mechanisms that are

provided to prevent the installation of the wrong types of fuses.

Look for fuses that have been bridged with wire, metal strips, or disks, or that appear to have been forced or hammered into place. Replace with the correct fuses and consult the manufacturer for recommendations for preventing a recurrence.

Look for evidence of overheating of cartridge fuses. Replace fuses having discolored or weakened casings. Investigate and correct the cause of overheating.

Inspect ferrules or knife blades of cartridge fuses for corrosion or oxidation. Clean and polish contact surfaces using a noncorrosive cleaning agent.

Plated parts may become dark over a period of time due to oxidation. Do not remove this discoloration, as it will reduce the thickness of the plating.

Measure fuse resistance. Investigate fuse resistance values that deviate from each other by more than 15 percent. Replace defective or partially-burned fuses. Retighten plug fuses.

Ensure that fuses are completely inserted in fuseholders when installing fuses.

9.4.7 Circuit Breakers

Operate circuit breakers several times to exercise mechanisms and contacts, and to ensure smooth operation. Preferably, use the circuit breaker test feature that trips, exercises, and lubricates the mechanism, if so equipped. Run self-diagnostics on circuit breakers equipped with solid-state circuitry or a microprocessor. Otherwise, operate circuit breakers manually. Make sure each operator mechanism quickly and positively throws contacts to the fully “ON” and fully “OFF” positions. Do not oil or grease parts of molded case circuit breakers.

For electronic-trip circuit breakers, use the test set to run trip unit tests automatically with user prompts.

Inspect circuit breakers for visual defects, chipping, cracks, breaks, burns, deterioration, and correct mounting. Visually check circuit breakers for evidence of overheating and thermal damage. Investigate and eliminate sources of overheating. Inspect contacts and arc chutes in unsealed circuit breakers. Replace damaged circuit breakers.

Inspect interchangeable trip units of circuit breakers for tightness.

Check circuit breaker terminals and connections for tightness using a calibrated torque wrench or screwdriver. Refer to the manufacturer instructions and markings for proper torque values. In the absence of manufacturer torque tables, tighten terminals in accordance with Annex I of NFPA 70.

Inspect aluminum conductors for extrusion and rework terminations, if required, keeping in mind that repeated tightening of loose connections will extrude aluminum conductors and may cause adverse operating conditions.

Adjust the settings of circuit breakers in accordance with the coordination study supplied by owner, if applicable.

9.4.8 Ground-Fault Protection Systems

Test ground-fault protection systems in accordance with manufacturer recommendations and the requirements of the authority having jurisdiction. See Section 7.5.

Prior to testing, ensure that all grounding conductors and connections, including the grounding electrode, neutral disconnect link, neutral system conductor, and main bonding jumper, if applicable, are installed. Check that the grounded conductor, or neutral, is solidly grounded ahead of the neutral disconnect link and on the line side of the ground fault sensor.

Check the polarity of both the primary and the secondary circuits of current transformers. Exercise extreme caution around current transformer circuits. A current transformer carrying primary current can develop high secondary terminal voltages if the secondary terminals are open-circuited.

Check ground-fault protection system terminations and connections for tightness, corrosion, and damage. Replace any damaged components.

Check that the ground-fault sensor is properly installed. Ensure that the ground fault sensor location is on the load side of the main bonding jumper termination. For ground-strap systems, the ground fault sensor should be installed on the main bonding jumper. For residual-ground fault systems, the ground fault sensor should be installed around all current-carrying conductors, including the neutral (grounded conductor) of three-phase, four-wire systems. Ensure that all conductors are routed in the same direction through the ground fault sensor, and that no grounding conductors are routed through the ground-fault sensor.

Using the manufacturer wiring diagrams, check that all control wiring is complete, including the current sensor, ground-fault relay, control power transformer, if applicable, and the main overcurrent device. Check that all lockouts are removed, including the main overcurrent device and any access panels. Check that all adjustments, such as ground-fault current pick-up and time delay settings have been made. Check that 120-volt AC power is available for testing.

Verify that the ground system is in compliance with drawings and specifications. Perform fall-of-potential testing or alternative in accordance with IEEE standard 81, *Guide for Measuring Earth Resistivity, Ground Impedance, and Earth Surface Potentials of a Ground System,* on the main grounding electrode or system. Perform point-to-point tests to determine the resistance between the main grounding system and all major electrical equipment frames, system neutral, and/or derived neutral points. The resistance between the main grounding electrode and ground system should be no greater than 5 ohms for commercial or industrial systems and one ohm or less for generating or transmission station grounds unless otherwise specified by the owner. Investigate point-to-point resistance values that exceed 0.5 ohm.

Remove the neutral disconnect link and measure neutral-to-ground insulation resistance. Insulation resistance should be a minimum of one megohm. Reinstall the neutral disconnect link.

Test the ground-fault protection system. Check all functions of the self-test panel, if so equipped. Additional testing may be conducted with or without tripping main or branch overcurrent protective devices. Preferably, test by actually tripping devices to ensure proper system operation.

Verify that the ground-fault relay operates above 90 percent of the setting, and below 125 percent of the setting, or 1200 amperes, whichever is less, by primary injection testing.

Verify the blocking capability of zone-interlock systems.

If the ground-fault protection system does not operate properly, and additional equipment has been connected to the installation since the last maintenance check, de-energize the entire system, disconnect the main bonding jumper, and check for continuity between the neutral and ground on the load side of the main bonding jumper. If grounds are found, remove them and test again. If no grounds are detected and the ground-fault protection system is still not functioning properly, contact the MCC manufacturer for recommendations.

If the ground-fault protection system does not operate properly, and no additional equipment has been connected to the installation since the last maintenance test or check, check devices for physical or electrical damage or loose connections. Correct any problems found.

9.4.9 Motor Starters, Contactors, and Controllers

Inspect, maintain, test, and repair or replace motor starters, contactors, and controllers in accordance with manufacturer instructions.

Check and adjust motor starter contact gap, wipe, alignment, and pressure in accordance with the manufacturer published data. Check contactor contacts for excessive wear, burning, or unusual pitting. *NOTE: Contacts will be pitted from normal operation. Do not file or otherwise dress normally pitted contacts.* Replace damaged or splattered contacts.

Operate mechanical devices. Check for smooth and precise operation.

Test starters, contactors, and controllers by initiating control devices.

Check control, power, and grounding conductors and connections for compliance with wiring diagrams.

9.4.10 Adjustable Speed Drives

Check the overcurrent set-points of drives with motor full-load current ratings to verify correct settings. Confirm that the set-points are within the limitations of the motor load. For drives operating multiple motors, compare the individual motor overload element ratings with the full-load current ratings at the minimum and maximum speed set-points of the drive.

Ensure vent path openings of adjustable speed drives are free from debris and that heat transfer surfaces are not fouled by oil, dust, or dirt.

9.4.11 Power Factor Capacitors

Examine capacitor enclosures for evidence of distortion, swelling, and rupture. Check enclosure and surrounding area for evidence of leakage. Perform a continuity check on capacitor fuses.

9.5 Electrical Testing

Perform insulation-resistance testing in accordance with Section 7.3.

9.6 Re-energizing Motor Control Centers

Energize MCCs in accordance with Section 8.2

Measure MCC feeder and branch load currents. Ensure that conductors are properly sized and protected for actual loading.

Measure and record incoming line voltage under load. Operational changes and system modifications frequently affect system voltages.

Verify the proper operation of devices and controls, such as solid-state industrial controllers, adjustable speed drives, and programmable controllers. Adjust devices in accordance with manufacturer instructions. Record final settings of programmable devices, such as adjustable speed drives and digital meters.

10. Adverse Circumstances

Special procedures are necessary to determine if an MCC can remain safely in service following a short circuit, ground-fault, or exposure to water.

Do not attempt to re-energize an MCC following a short circuit or ground-fault condition within the MCC without performing inspections and checks in accordance with Section 10.1. Do not re-energize a feeder or branch overcurrent device in the MCC that has opened due to a short circuit or ground-fault until the problem downstream has been corrected.

10.1 Inspection Following a Short Circuit or Ground-fault Condition

Consult the manufacturer for recommendations before performing any testing or maintenance following a short-circuit or ground-fault.

De-energize the MCC in accordance with Section 3. Identify and remove the cause of the short-circuit or ground-fault.

Inspect the MCC for damage. Use manufacturer-recommended replacement parts and components that are of the proper rating and suitable for the application.

Operate switches and circuit breaker several times manually to check mechanisms for free operation and proper working order. The external operating handles of disconnect switches and circuit breakers should open the respective circuit. Replace damaged devices and devices that fail to open.

Inspect the MCC for physical damage in structural components, bussing, and conductors. Check for mechanical distortion, thermal damage, metal deposits, and products of combustion.

Inspect the enclosure, doors, fasteners, and external components for evidence of damage, such as deformation, displacement of parts, or burning. Check that door-mounted equipment and safety interlocks function correctly. Verify that hinge and latch integrity is maintained. Inspect door interlocks

and verify proper functioning prior to restoring to service.

Examine bussing, fasteners, supports, and insulators for damage. Replace damaged or deformed bus and fasteners, such as bus with melted, worn, or damaged plating. Examine bus supports for cracks or breakage. Replace insulators showing damage, deterioration, or deposits. Check air gaps and distances over surfaces between live parts and grounded metal parts.

Check conductors and insulators for damage, keeping in mind that some organic insulating materials may deteriorate during an electrical arc and must be replaced. Inspect and evaluate all connections and terminations to prevent loosened connections from pulling out of their terminations on subsequent short circuits. Replace all terminals and conductors that show evidence of discoloration, melting, or arcing damage.

Examine circuit breakers for evidence of damage. Inspect devices that opened for possible arcing damage to contacts, arc chutes, and/or insulation. Do not open sealed devices. Replace any sealed units that are suspected of sustaining damage. If there is no apparent evidence of damage, reset the circuit breaker and turn "ON" using the external operating handle. Replace circuit breakers that have opened several times under fault conditions or shows signs of damage or deterioration.

Replace disconnect switches if visual inspection indicates deterioration, such as overheating, arc chute damage, contact blade or jaw pitting, charring, welding, or insulation breakage. Replace fuse holders if the insulating mounts, barriers, or fuse clips show signs of damage, deterioration, heating, distortion, or looseness. Replace all fuses in a multiphase circuit, even if only one or two are open-circuited.

Replace motor starters, contactor contacts, and contact springs if the contacts are welded or show thermal damage, evidence of arcing on the contactor moldings, insulation damage, displacement of metal, evidence of binding in the guides, or wear in excess of wear allowances. If deterioration extends beyond the contacts, replace the contactor or starter.

Visually inspect heater elements and overload relays. Replace burned-out heater elements. Replace overload relays with any indication of arcing or burning, and when recommended by the manufacturer. Check contact operation by electrically or mechanically tripping and resetting the overload relay.

Inspect stab-on clips for evidence of arcing, melting, erosion, deformation, or general heat damage. Replace damaged stab-on assemblies.

Perform insulation resistance testing as specified in Section 7.3. Compare insulation resistance test results with previous test results and with the original factory test data corrected for temperature variations using manufacturer-recommended multipliers. Typical factory test results exceed 100 megohms. Correct deficiencies or replace components in accordance with manufacturer recommendations.

Clean, inspect, test, and maintain the MCC in accordance with Section 9. Re-energize MCCs in accordance with Section 8.2.

10.2 Replacing or Reconditioning a Motor Control Center Submerged in or Soaked by Water

Do not work on electrical equipment while standing in water. Do not energize an MCC that is wet.

After being submerged in or soaked by water, MCCs can be replaced or may possibly be reconditioned by trained personnel in consultation with the manufacturer.

MCC components that require complete replacement when submerged in or soaked by water include molded case circuit breakers and molded case switches, fuses, overload relays, contacts, wiring and conductors, control transformers, and electronic and solid-state components containing printed circuit boards, semiconductors, and transistors.

The ability to recondition or refurbish water-damaged electrical equipment will vary depending upon the age of the equipment, the contamination level of the water, the length of time that the equipment was in contact with water, and the length of time that the equipment is exposed to the atmosphere after exposure to water.

Reconditioning may include the repair or replacement of internal components, and should only be performed by qualified personnel familiar with the operation and construction of such equipment in consultation with the original equipment manufacturer.

Non-trained personnel should not attempt to disassemble and reassemble equipment that was assembled at the factory by trained personnel based on strict design guidelines.

10.3 Inspecting and Re-energizing a Motor Control Center Sprayed or Splashed with Clean Water

It may be possible to inspect, recondition, and reenergize an MCC that has been sprayed or splashed with clean water, provided that the MCC was not physically damaged or soaked or submerged in water, that the water was not contaminated with sewage, chemicals, or other substances, and that the water did not contact conductors or any energized components.

De-energize and electrically isolate the MCC in accordance with Section 3.

Verify that there is no evidence of water contact with conductors or any energized electrical components such as molded case circuit breakers, molded case switches, fuses, overload relays, contacts, wiring and conductors, control transformers, and electronic and solid-state components containing printed circuit boards, semiconductors, and transistors. If there is evidence of water contacting these components, they must be replaced. Consult the manufacturer for recommendations.

Wipe off all moisture from bus bars, insulators, and insulating materials with a clean, dry, lint-free cloth. Do not use cleaning agents or sprays unless specifically recommended by the MCC manufacturer.

Dry the MCC by applying a minimum of 250 watts of heat per vertical section until no visible signs of dampness remain. Remove all combustible materials from MCCs before applying heat.

Perform insulation resistance testing in accordance with Section 7.3. Disconnect and electrically isolate all line-side and load-side conductors. Turn all circuit breakers or fusible switches to the “ON” position. Perform phase-to-ground and phase-to-phase insulation tests. Reenergize equipment only with insulation resistance measurements greater than 500,000 ohms.

Re-energize equipment in accordance with Section 8.2.

11. Motor Control Center Insulation Resistance Chart

NOTE: The use of an AC dielectric tester for testing the MCC is not recommended. Use an insulation resistance tester with a capacity of 500-1000 Vdc.

	Phase-to-Phase			Phase-to-Ground			Neutral-to-Ground
Date	**All Disconnects Open**						
	A-B	**B-C**	**C-A**	**A-GND**	**B-GND**	**C-GND**	**N-GND**

	Phase-to-Phase			Phase-to-Ground			Neutral-to-Ground
Date	**All Disconnects Closed**						
	A-B	**B-C**	**C-A**	**A-GND**	**B-GND**	**C-GND**	**N-GND**

(This Annex is not a part of the Standard)

Annex A: Reference Standards

NEMA GD 1, *Evaluating Water-Damaged Electrical Equipment*

NETA *Acceptance Testing Specification*

NETA *Maintenance Testing Specification*

NFPA 70-2020, *National Electrical Code*